Service
Service
Service

Service Manual

Horizontal Frequency
30-80kHz

TABLE OF CONTENTS

Description	Page
Table Of Contents	1
Revision List	2
1. Monitor Specification	3
2.LCD Monitor Description	4
3. Operation Instruction	5
3.1 General Instructions	5
3.2 Control Button	5
3.3 Adjusting the Picture	6
4. Input/Output Specification	7
4.1 Input Signal Connector	7
4.2 Factory Preset Display Modes	8
4.3 Power Supply Requirements	8
5 Panel Specification	9
5.1 Display Characteristics	9
5.2 Optical Characteristics	9
5.3 Parameter guide line for CCFL Inverter	10
6.Block Diagram	11
6.1 Software Flow Chat	11
6.2 Electrical Block Diagram	12
7. Schematic	15
7.1 Main Board	15
7.2 Power Board	20
8. PCB Layout	22
8.1 Main Board	22
8.2 Power Board	25
8.3 Key Board	28
8.4 Audio Board	28
9. Maintainability	29
9.1. Equipments and Tools Requirement	29
9.2. Trouble Shooting	30
10. White-Balance, Luminance adjustment	35
11.Monitor Exploded View	36
12. BOM List	37

SAFETY NOTICE

ANY PERSON ATTEMPTING TO SERVICE THIS CHASSIS MUST FAMILIARIZE HIMSELF WITH THE CHASSIS AND BE AWARE OF THE NECESSARY SAFETY PRECAUTIONS TO BE USED WHEN SERVICING ELECTRONIC EQUIPMENT CONTAINING HIGH VOLTAGES.

CAUTION: USE A SEPARATE ISOLATION TRANSFOMER FOR THIS UNIT WHEN SERVICING

Revision List

Revision	Date	Revision History	TPV Model
A00	Jan.-17-2008	Initial release	T77SRTDBF1ACANE

1. Monitor Specifications

General	Model number	177Vk
LCD Panel(17")	Driving system	TFT Color LCD
	Viewable Image Size:	432mm diagonal
	Pixel pitch	0.264mm(H) x 0.264mm(V)
	Video	R, G, B Analog interface
	Video	Digital Interface (only Dual-Input Model)
	Separate Sync.	H/V TTL
	Separate Sync.	TMDS (only Dual-Input Model)
	Display Color	16.2million Colors
	Dot Clock	135MHz
Resolution	Horizontal scan range	30 kHz to 80 kHz
	Horizontal scan Size(Maximum)	337.92mm
	Vertical scan range	55 Hz to 75 Hz
	Vertical scan Size(Maximum)	270.34mm
	Optimal preset resolution	1280 x 1024 at 60 Hz
	Highest preset resolution	1280 x 1024 at 75 Hz
	Highest addressable resolution	1280 x 1024 at 75 Hz
	Plug & Play	VESA DDC2B
	Input Connector	D-Sub 15pin
	Input Connector	DVI-D (only Dual-Input Model)
	Input Video Signal	Analog: 0.7Vp-p(standard), 75 OHM, Positive
	Input Video Signal	DVI-D Digital Interface (TMDS) (only Dual-Input Model)
	Power Source	100~240VAC, 47~63Hz
Physical Characteristics	Connector Type	15-pin Mini D-Sub
	Signal Cable Type	Detachable
	Connector Type	24 pin DVI-D (only Dual-Input Model)
	Dimensions & Weight:	
	Height (with base)	383.89 mm
	Width	375.45 mm
	Depth	209.60 mm
	Weight (monitor only)	3.7 kg
	Weight (with packaging)	5.5 kg
Environmental	Temperature:	
	Operating	+5° to +35°
	Non-Operating	-20° to 60°
	Humidity:	
	Operating	10% to 85% (non-condensing)
	Non-Operating	5% to 80% (non-condensing)
	Altitude:	
	Operating	0~3000m (0~10000 ft)
	Non-Operating	0~5000m (0~15000 ft)
Regulations	**cULus, FCC, TÜV/GS, CE, ISO13406-2, TCO'03, Windows® XP**	

2. LCD Monitor Description

The LCD MONITOR will contain a main board, a power board, an audio board and a key board which house the flat panel control logic, brightness control logic and DDC.

The power board will provide AC to DC Inverter voltage to drive the backlight of panel and the main board chips each voltage.

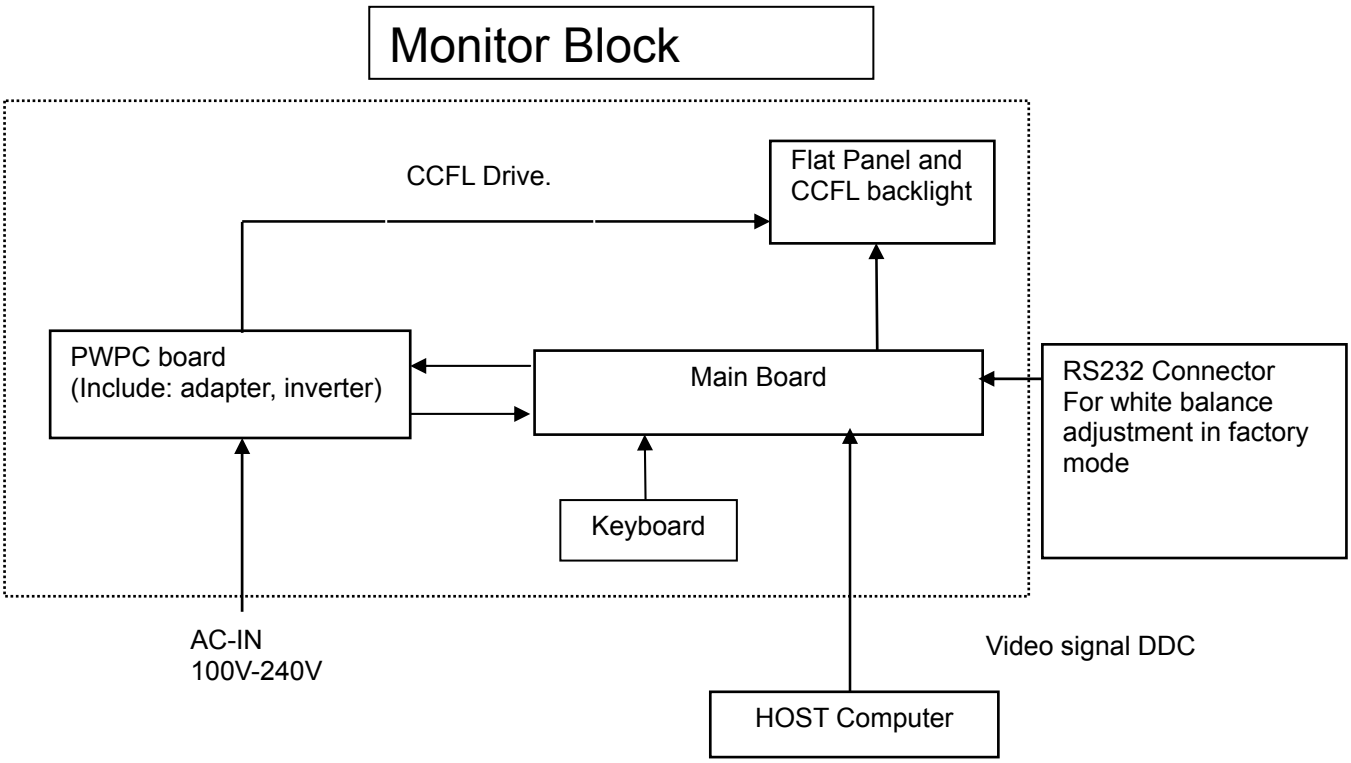

3. Operating Instructions

3.1 General Instructions

Press the power button to turn the monitor on or off. The other control buttons are located at front panel of the monitor.

By changing these settings, the picture can be adjusted to your personal preferences.

- The power cord should be connected.
- Connect the video cable from the monitor to the video card.
- Press the power button to turn on the monitor, the power indicator will light up.

3.2 Control Buttons

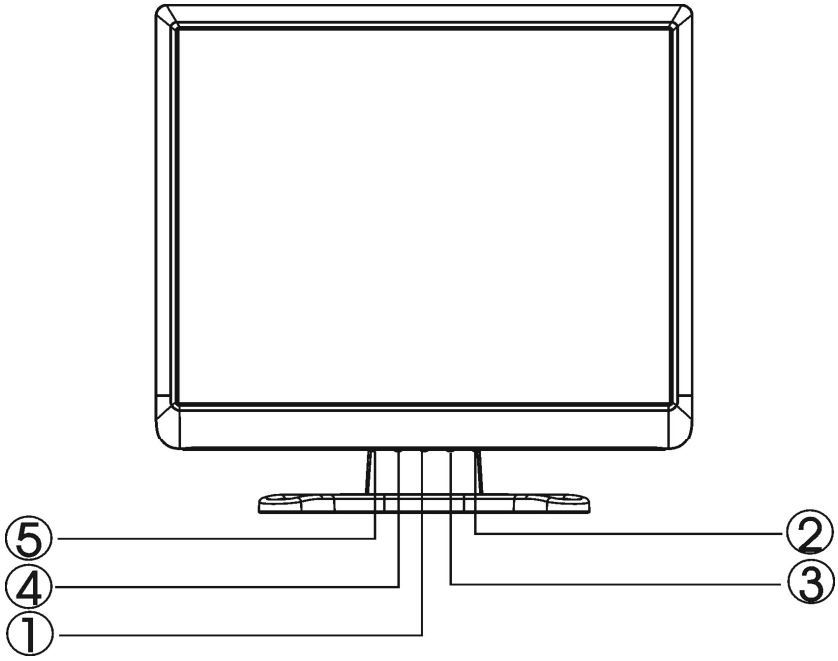

1	Power Button/Power Indicator	4	Menu / Enter
2	Volume Control	5	Auto Config / Exit
3	Volume Control		

3.3 Adjusting the Picture

1. Press the MENU-button to activate the OSD window .
2. Press +or- to navigate through the functions. Once the desired function is highlighted, press the MENU-button to activate it. If the function selected has a sub-menu, press +or- again to navigate through the sub-menu functions. Once the desired function is highlighted, press MENU-button to activate it.
3. Press +or- to change the settings of the selected function.
4. To exit and save, select the exit function. If you want to adjust any other function, repeat steps 2-3.

Main Menu Item	Main Menu Icon	Sub Menu Item	Sub Menu Icon	Description
Luminance		Contrast		Contrast from Digital-register.
		Brightness		Backlight Adjustment
Image Setup		Focus		Adjust Picture Phase to reduce Horizontal-Line noise
		Clock		Adjust picture Clock to reduce Vertical-Line noise.
Image Position		H. Position		Adjust the horizontal position of the picture.
		V. Position		Adjust the vertical position of the picture.
Color Temp.		Warm	N/A	Recall Warm Color Temperature from EEPROM.
		Cool	N/A	Recall Cool Color Temperature from EEPROM.
		sRGB	N/A	Recall sRGB Temperature from EEPROM.
		User / Red	R	Red Gain from Digital-register.
		User / Green	G	Green Gain Digital-register.
		User / Blue	B	Blue Gain from Digital-register.
Auto Config (only Analog-input Model)	AUTO	Yes	N/A	Auto Adjust the H/V Position, Focus and Clock of picture.
		No	N/A	Do not execute Auto Config, return to main menu.
Input Select (only Dual-Input Model)		Analog	N/A	Select input signal from analog source (D-Sub)
		Digital	N/A	Select input signal from digital source (DVI)
OSD Setup	OSD	H. Position		Adjust the horizontal position of the OSD.
		V. Position		Adjust the vertical position of the OSD.
		OSD Timeout		Adjust the OSD timeout.
Language		Language	N/A	Select the language you like.
Information		Information	N/A	Show the resolution, H/V frequency and input port of current input timing.
Reset		Yes	N/A	Clear each old status of Auto-configuration.
		No	N/A	Do not execute reset, return to main menu.
Exit	EXIT	N/A	N/A	Exit OSD

4. Input/Output Specification

4.1 Input Signal Connector

4.1.1 D-SUB connector

PIN NO.	DESCRIPTION	PI N NO.	DESCRIPTION
1	Video-Red	9	+5V
2	Video-Green	10	Detect Cable
3	Video-Blue	11	Ground
4	GND	12	DDC-Serial data
5	DDC-Return	13	H-sync
6	GND-R	14	V-sync
7	GND-G	15	DDC-Serial clock
8	GND-B		

VGA connector layout

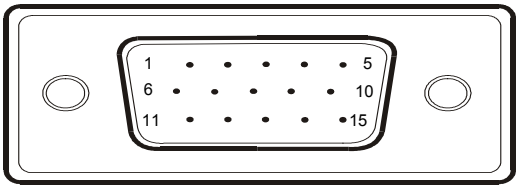

4.1.2 DVI-D connector

Pin No.	Signal Name	Pin No.	Signal Name
1	TMDS Data 2-	13	TMDS Data 3+
2	TMDS Data 2+	14	+5V Power
3	TMDS Data 2/4 Shield	15	Ground(for+5V)
4	TMDS Data 4-	16	Hot Plug Detect
5	TMDS Data 4+	17	TMDS Data 0-
6	DDC Clock	18	TMDS Data 0+
7	DDC Data	19	TMDS Data 0/5 Shield
8	N.C.	20	TMDS Data 5-
9	TMDS Data 1-	21	TMDS Data 5+
10	TMDS Data 1+	22	TMDS Clock Shield
11	TMDS Data 1/3 Shield	23	TMDS Clock +
12	TMDS Data 3-	24	TMDS Clock -

24 - Pin Color Display Signal Cable

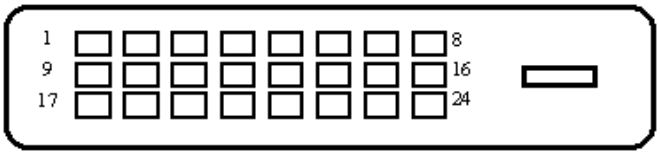

4.2 Factory Preset Display Modes

Standard	Resolution	Horizontal Frequency (kHz)	Vertical Frequency (Hz)
Dos-mode	720 x 400	31.47	70
VGA	640 x 480	31.47	60
VGA	640 x 480	37.5	75
SVGA	800 x 600	37.879	60
SVGA	800 x 600	46.875	75
XGA	1024 x 768	48.363	60
XGA	1024 x 768	56.476	70
XGA	1024 x 768	60.02	75
XGA	1024 x 768	48.78	60
XGA	1024 x 768	60.241	75
SXGA	1280 x 1024	64	60
SXGA	1280 x 1024	80	75

5 Panel Specification

5.1 Display Characteristics

Items	Specification	Unit
Pixel Pitch	0.264(H) x 0.264(W)	mm
Active Display Area	337.92(H) x 270.336(V)	mm
Surface Treatment	Haze 25%, Hard-coating (3H)	
Display Colors	16.7M	colors
Number of Pixels	1280 x 1024	pixel
Pixel Arrangement	RGB vertical stripe	
Display Mode	Normally White	
Power Consumption	20.4 Watt (Typ.)	
Luminance of White	300(Typ.)	cd/• •

5.2 Optical Characteristics

Item		Symbol	Condition	Min.	Typ.	Max.	Unit
Contrast Ratio (Center of screen)		C/R	Normal • L,R=0 • U,D=0 Viewing Angle	600	1,000	-	
Response Time	Rising	Tr		-	1.3	4	msec
	Falling	Tf		-	3.7	6	
Luminance of White (Center of screen)		Y_L		250	300	-	cd/m2
Color Chromaticity (CIE 1931)	Red	Rx		0.620	0.650	0.680	
		Ry		0.300	0.330	0.360	
	Green	Gx		0.270	0.300	0.330	
		Gy		0.570	0.600	0.630	
	Blue	Bx		0.120	0.150	0.180	
		By		0.050	0.080	0.110	
	White	Wx		0.283	0.313	0.343	
		Wy		0.299	0.329	0.359	
Color Chromaticity (CIE 1976)	Red	Ru'		-	0.459	-	
		Rv'		-	0.525	-	
	Green	Gu'		-	0.125	-	
		Gv'		-	0.563	-	
	Blue	Bu'		-	0.164	-	
		Bv'		-	0.197	-	
	White	Wu'		-	0.198	-	
		Wv'		-	0.468	-	
C.G.L*	White	• u'v'		-	0.018	0.02	
Color Gamut		-		-	72	-	%
Color Temperature		-		-	6,500	-	K
Viewing Angle	Hor.	• L	CR• 10(5)	70(80)	80(89)	-	Degrees
		• R		70(80)	80(89)	-	
	Ver.	• U		70(80)	80(89)	-	
		• D		70(80)	80(89)	-	
Brightness Uniformity (9 Points)		B_{uni}		-	-	25	%

5.3 Parameter guide line for CCFL Inverter

1. TFT LCD Module:

Item		Symbol	Min.	Typ.	Max.	Unit
Voltage of Power Supply		V_{DD}	4.5	5.0	5.5	V
LVDS Input Characteristics	Differential Input Voltage for LVDS Receiver Threshold	High	-	-	+100	mV
		Low	-100	-	-	mV
	LVDS skew	t_{SKEW}	-380		380	ps
	Differential input voltage	$\|V_{ID}\|$	200		600	mV
	Input voltage range (single-ended)	V_{IN}	0		2.4	V
	Common mode voltage	V_{CM}	0+ $\|V_{ID}\|/2$	1.2	2.4- $\|V_{ID}\|/2$	V
	Input current	I_{IN}			• 10	• •
Current of Power Supply	(a) Black	I_{DD}	-	600	-	mA
	(b) White		-	500	-	mA
	(c) Dot		-	700	850	mA
Vsync Frequency		f_V	49	60	76	Hz
Hsync Frequency		f_H	56.7	64	72.802	kHz
Main Frequency		f_{DCLK}	40	54	69.28	MHz
Rush Current		I_{RUSH}	-	-	3.0	A

2. Back Light Unit:

Item		Symbol	Min.	Typ.	Max.	Unit
Lamp Current		I_L	3.0	6.5	7.0	mArms
Lamp Voltage		V_L	-	650	-	Vrms
Lamp Frequency		f_L	40	-	60	kHz
Operating Life Time		Hr	50,000	-	-	Hour
Inverter waveform	Asymmetry rate	Wasy	-	-	10	%
	Distortion rate	Wdis	1.2726	1.414	1.5554	
Startup Voltage		Vs	-	-	0• •: 1,650	Vrms
					25• : 1,450	

6. Block Diagram

6.1 Software Flow Chat

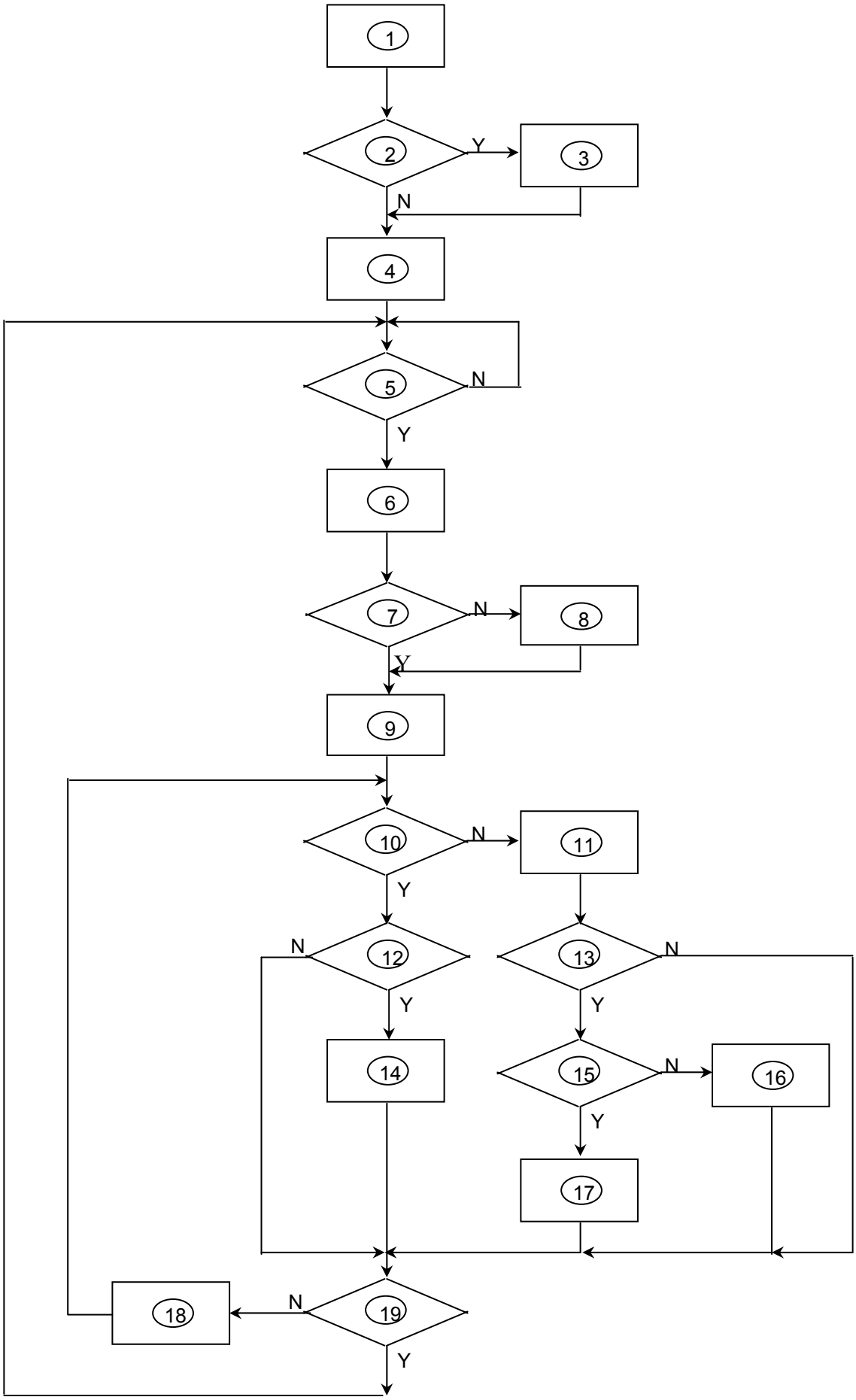

1) MCU initialize.

2) Is the EPROM blank?

3) Program the EPROM by default values.

4) Get the PWM value of brightness from EPROM.

5) Is the power key pressed?

6) Clear all global flags.

7) Are the AUTO and SELECT keys pressed?

8) Enter factory mode.
9) Save the power key status into EPROM.
Turn on the LED and set it to green color.
Scalar initializes.

10) In standby mode?

11) Update the lifetime of back light.

12) Check the analog port, are there any signals coming?

13) Does the scalar send out an interrupt request?

14) Wake up the scalar.

15) Are there any signals coming from analog port?
16) Display "No connection Check Signal Cable" message. And go into standby mode after the message disappear.

17) Program the scalar to be able to show the coming mode.

18) Process the OSD display.

19) Read the keyboard. Is the power key pressed?

6.2 Electric Block Diagram

6.2.1 Main Board

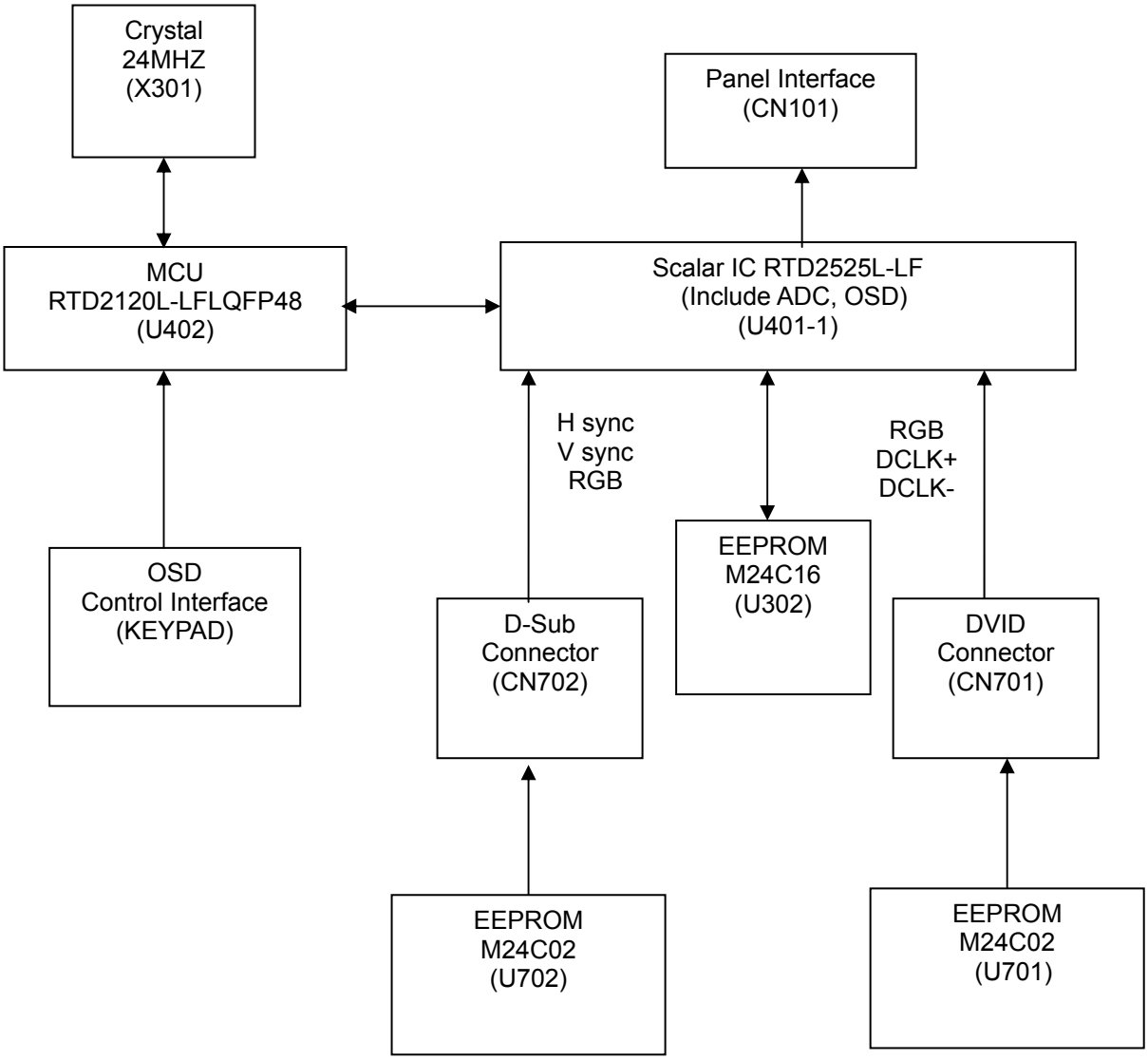

6.2.2 Inverter / Power Board

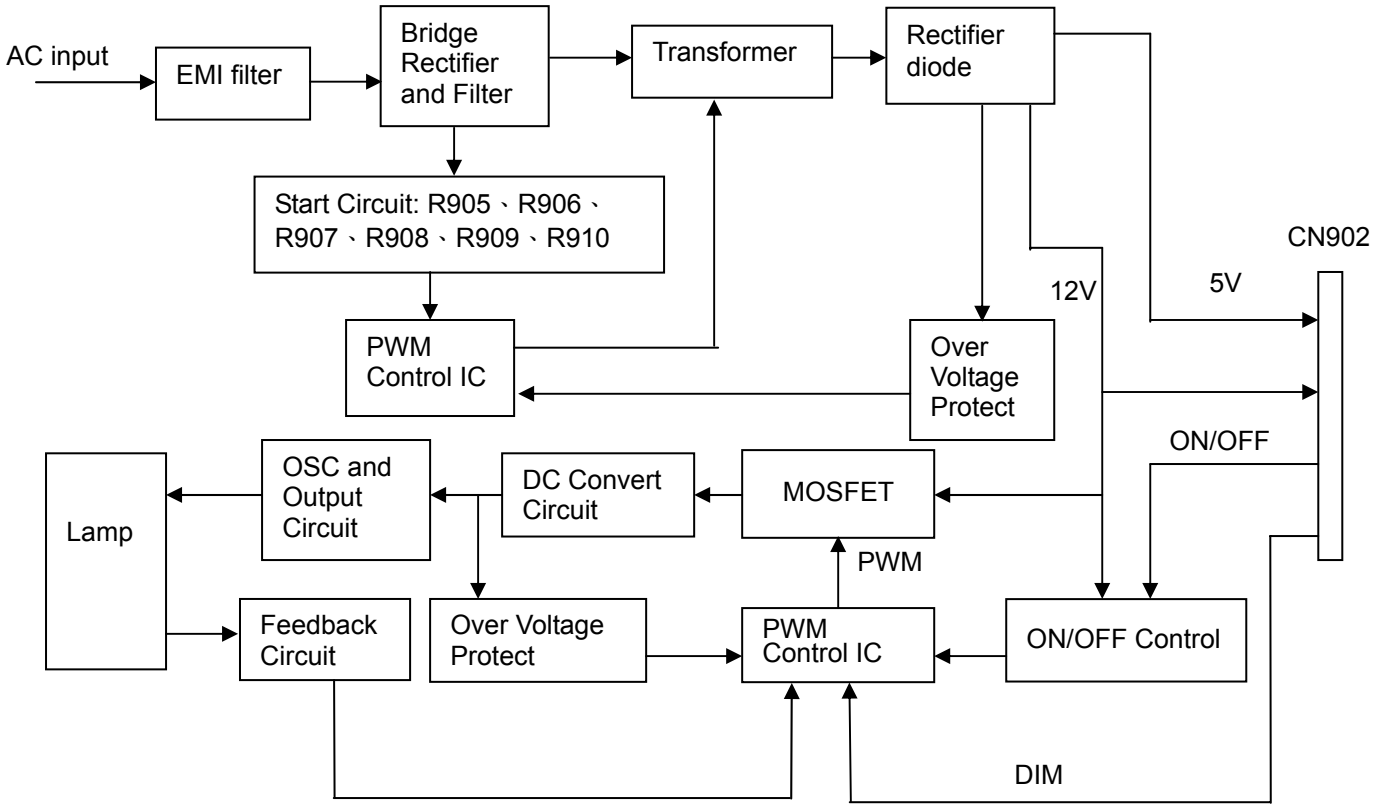

7. Schematic

7.1 Main Board

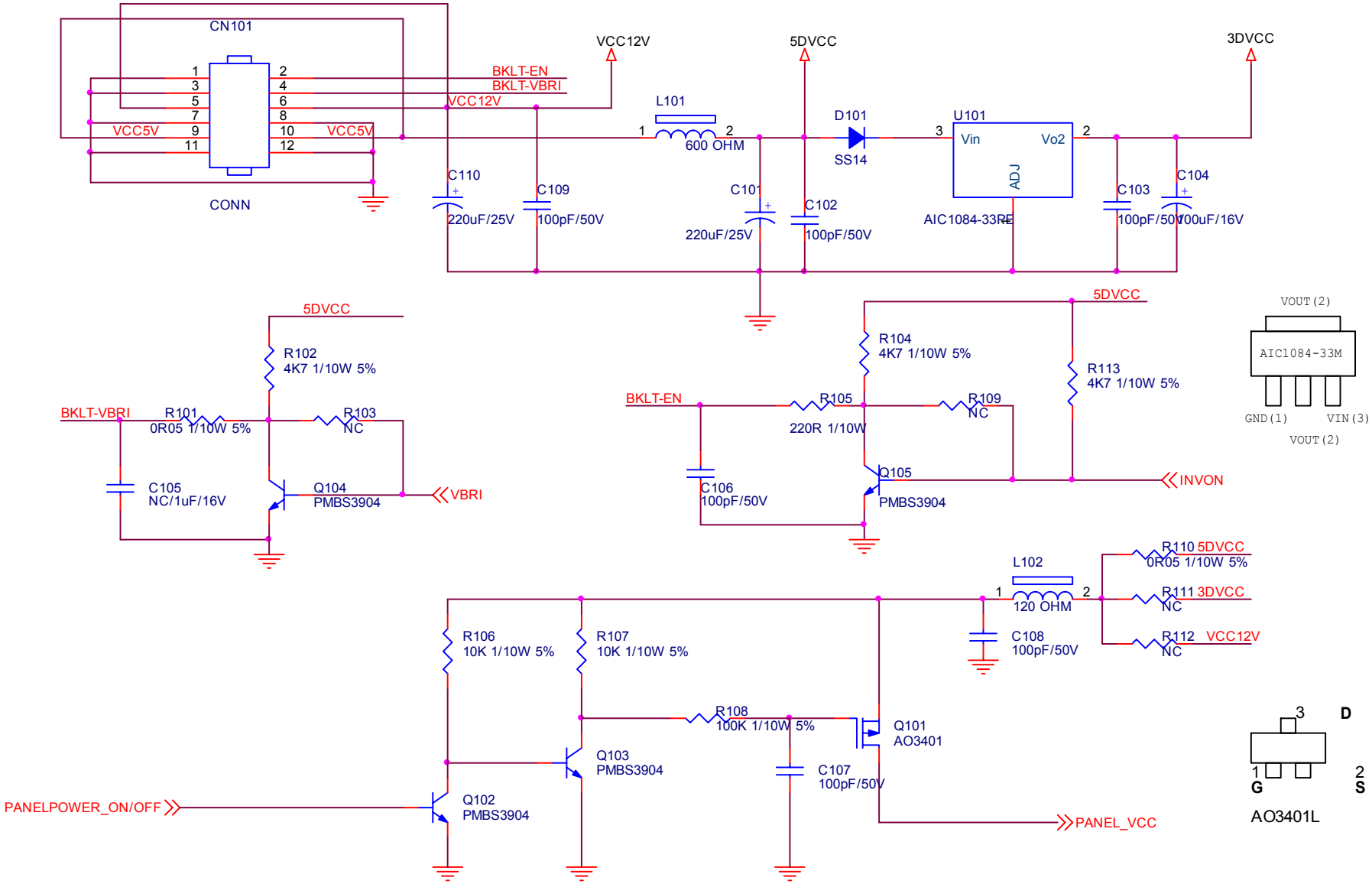

T P V (Top Victory Electronics Co., Ltd.)		OEM MODEL	177Sa	Size	A
結隔瓜網腹	G2264-1-X-X-4-070702	TPV MODEL	T76SRDDBF1A3AN	Rev	1.1
Key Component	2.0.Power	PCB NAME	715G2264-1	称爹	
Date	Monday, July 02, 2007	Sheet	1 of 6		

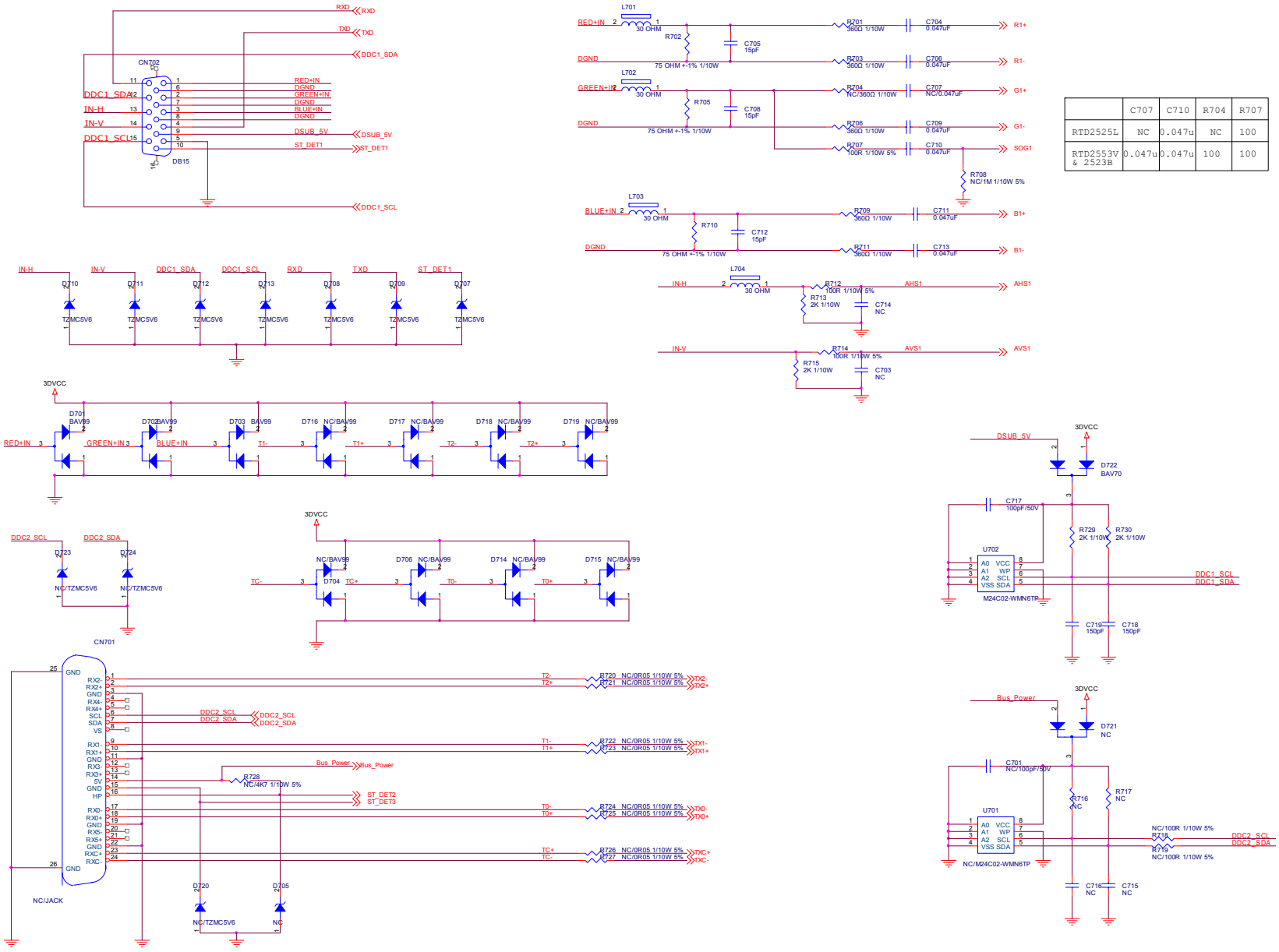

	C707	C710	R704	R707
RTD2525L	NC	0.047u	NC	100
RTD2553V & 2523B	0.047u	0.047u	100	100

T P V (Top Victory Electronics Co . , Ltd.)		OEM MODEL	177Sa	Size	C
話隔瓜鋼腹	G2264-1-X-X-4-070702	TPV MODEL	T76SRDDBF1A3AN	Rev	1.1
Key Component	3.0.Input	PCB NAME	715G2264-1	称爹	
Date	Monday, July 02, 2007	Sheet	3 of 6		

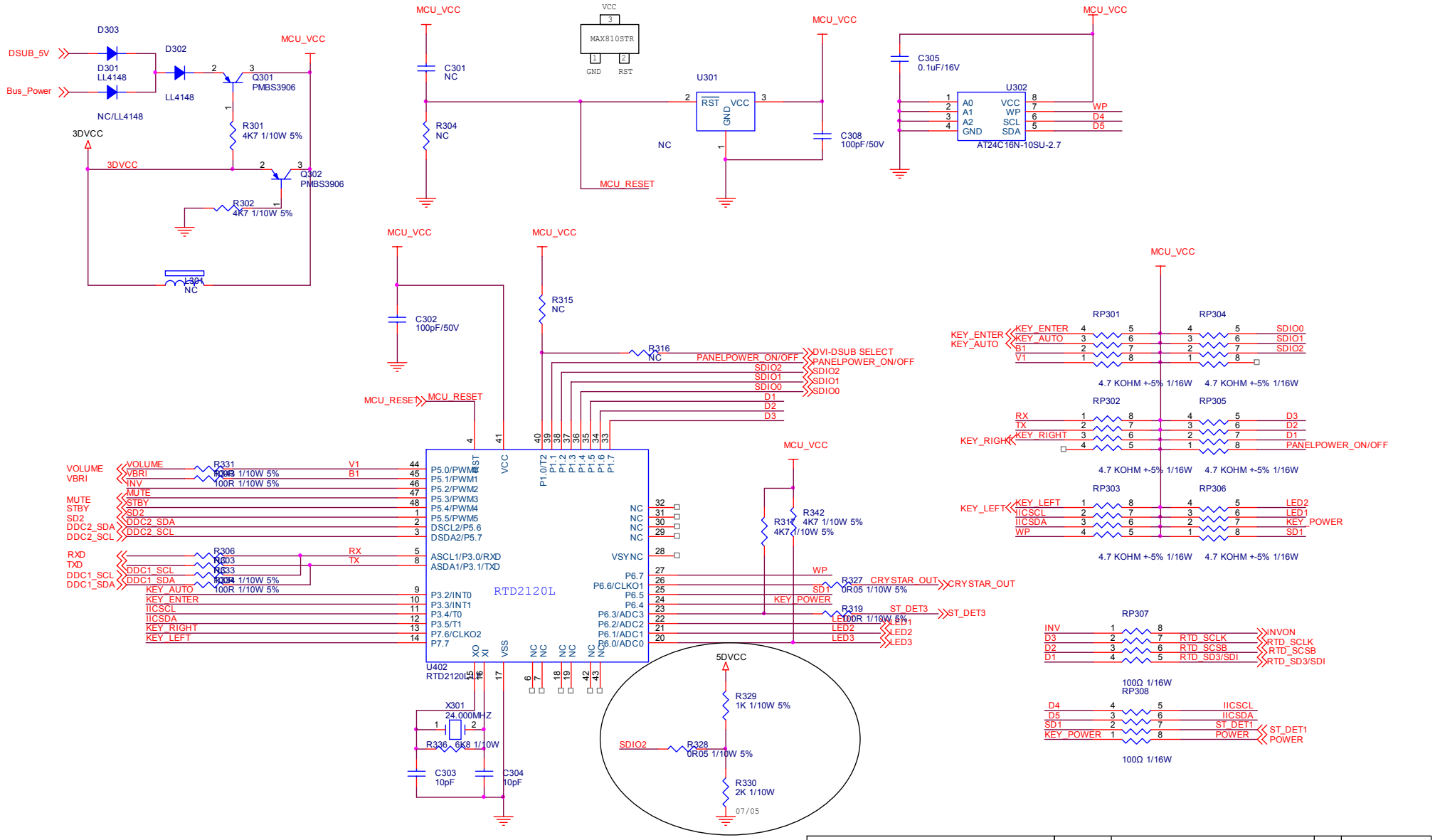

T P V (Top Victory Electronics Co., Ltd.)		OEM MODEL	177Sa	Size	B
結 隔 瓜 銅 腹	G2264-1-X-X-4-070702	TPV MODEL	T76SRDDBF1A3AN	Rev	1.1
Key Component	4.0.MCU(RTD2120L)	PCB NAME	715G2264-1	称爹	
Date	Monday, July 02, 2007	Sheet	4 of 6		

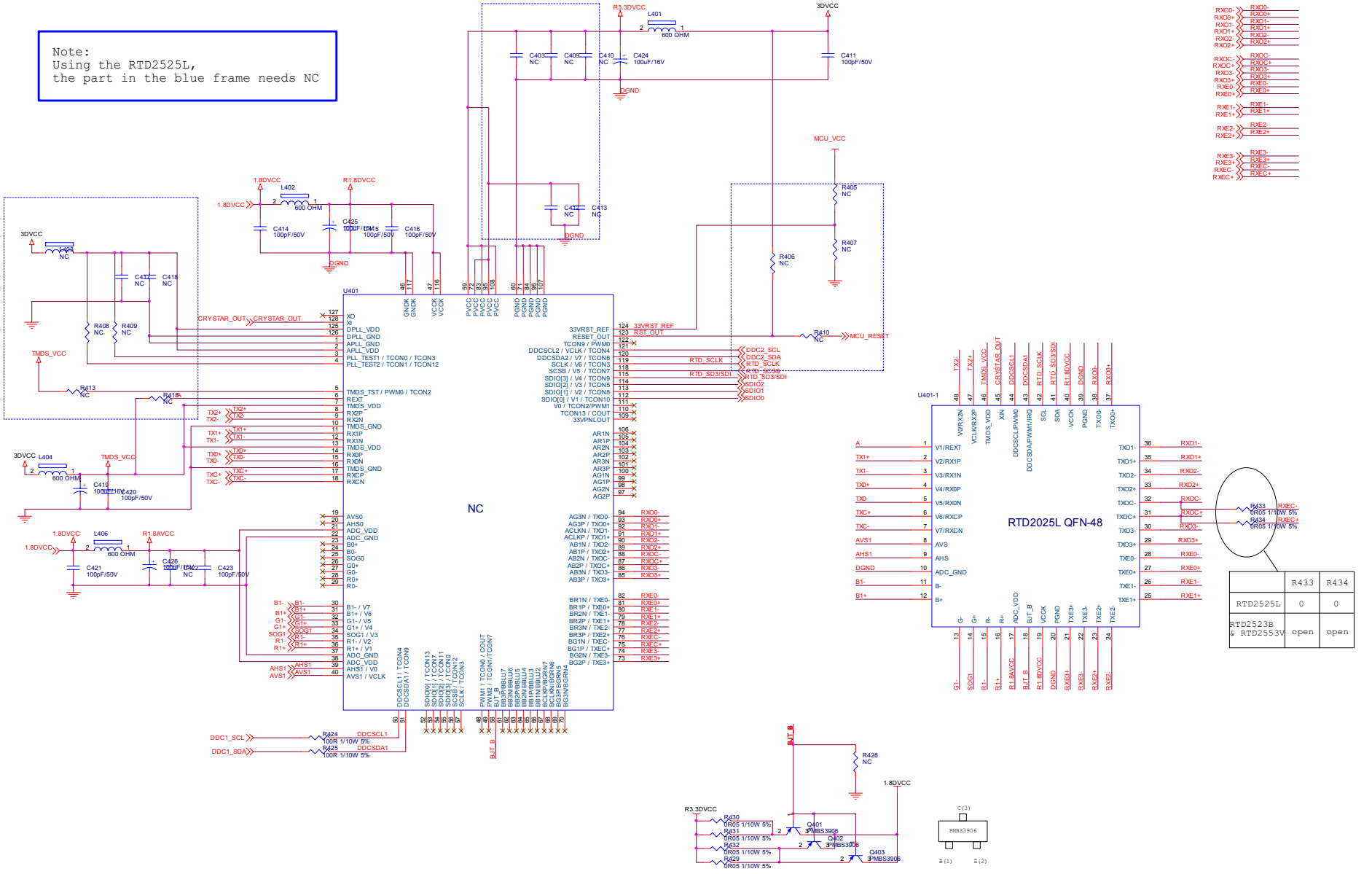

	R433	R434
RTD2525L	0	0
RTD2523B & RTD2553V	open	open

T P V (Top Victory Electronics Co., Ltd.)		OEM MODEL	177Sa	Size	C
纸隔瓜蝎腹	G2264-1-X-X-4-070702	TPV MODEL	176SRDDBF1A3AN	Rev	1.1
Key Component	5.0.RTD2525L	PCB NAME	715G2264-1	称爹	
Date	Monday, July 02, 2007	Sheet	5 of 6		

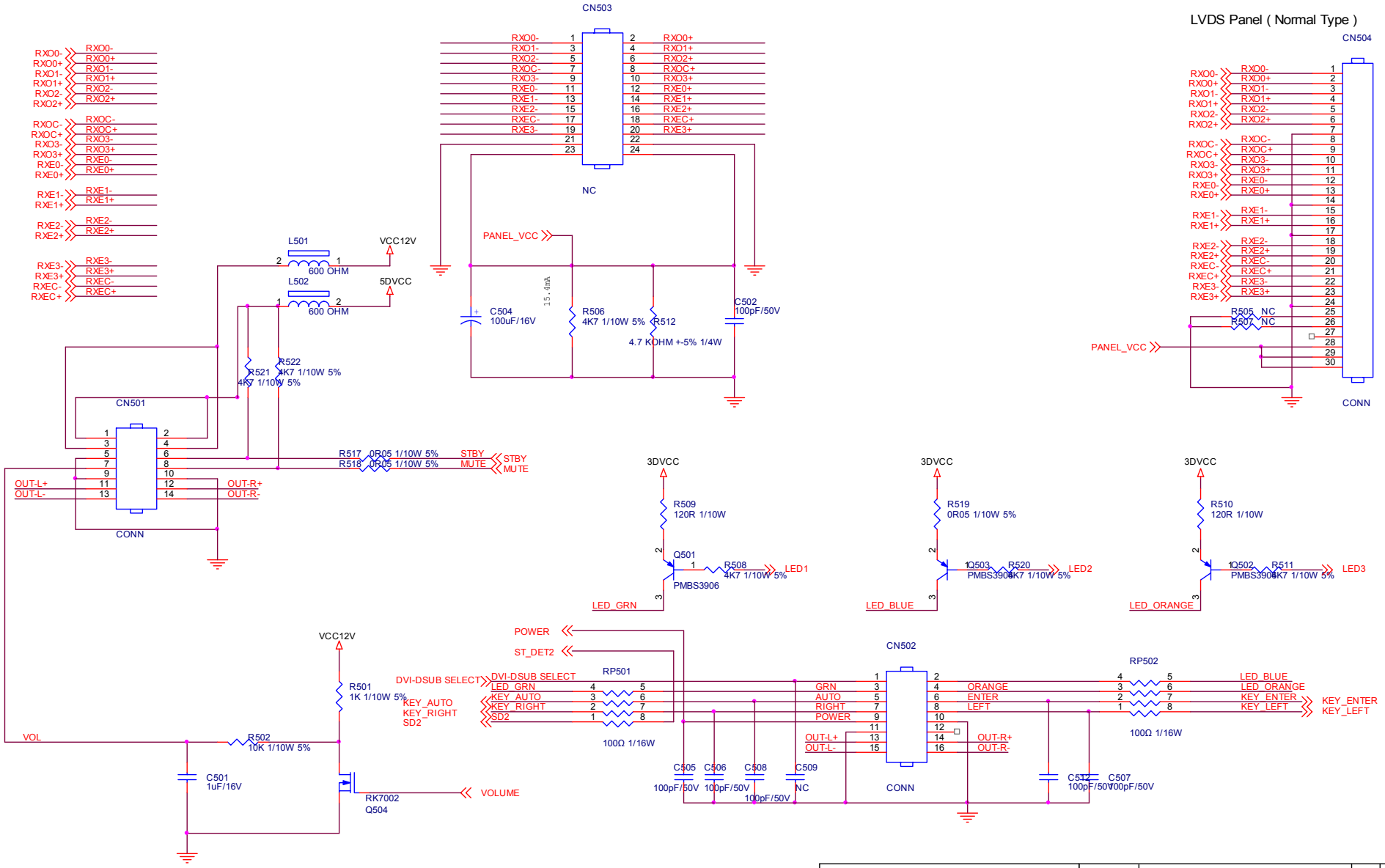

T P V (Top Victory Electronics Co., Ltd.)		OEM MODEL	177Sa	Size	B
紙隔瓜細腹	G2264-1-X-X-4-070702	TPV MODEL	T76SRDDBF1A3AN	Rev	1.1
Key Component	6.0.Output	PCB NAME	715G2264-1	称爹	
Date	Monday, July 02, 2007	Sheet	6 of 6		

7.2 Power Board

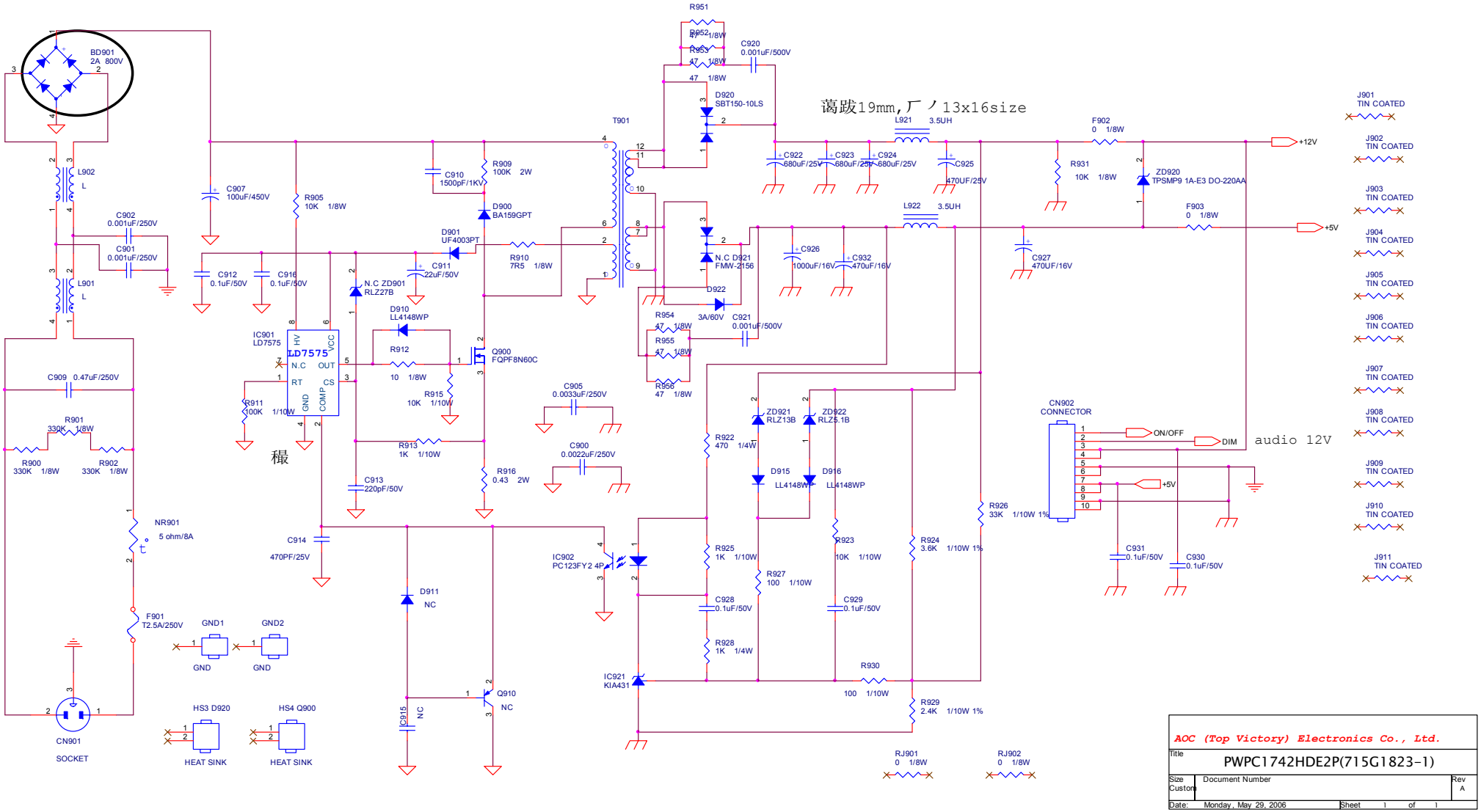

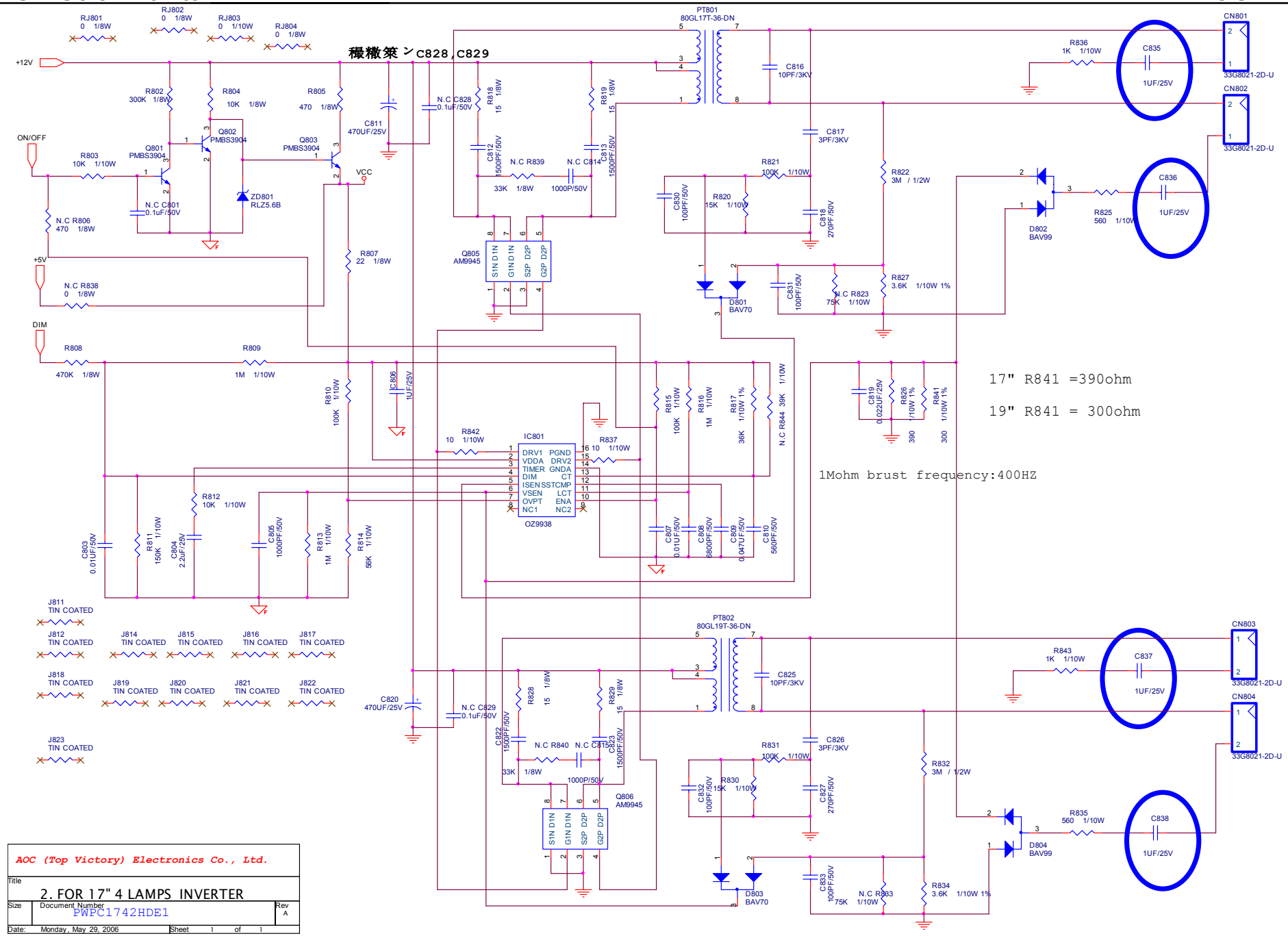
+12V
ON/OFF
+5V
DIM
VCC
RJ801 0 1/8W
RJ802 0 1/8W
RJ803 0 1/10W
RJ804 0 1/8W
R802 300K 1/8W
R804 10K 1/8W
R805 470 1/8W
R803 10K 1/10W
Q801 PMBS3904
Q802 PMBS3904
Q803 PMBS3904
ZD801 RLZ5.6B
N.C C801 0.1uF/50V
N.C R806 470 1/8W
N.C R838 0 1/8W
R807 22 1/8W
C811 470UF/25V
N.C C828 0.1uF/50V
R818 15 1/8W
R819 15 1/8W
C812 1500PF/50V
C813 1500PF/50V
N.C R839 33K 1/8W
N.C C814 1000P/50V
Q805 AM9945
S1N D1N G1N D1N S2P D2P G2P D2P
PT801 80GL17T-36-DN
C816 10PF/3KV
C817 3PF/3KV
C818 270PF/50V
C830 100PF/50V
R820 15K 1/10W
R821 100K 1/10W
R822 3M / 1/2W
R827 3.6K 1/10W 1%
D801 BAV70
C831 100PF/50V
N.C R823 75K 1/10W
R836 1K 1/10W
C835 1UF/25V
CN801 33G8021-2D-U
CN802 33G8021-2D-U
C836 1UF/25V
R825 560 1/10W
D802 BAV99
R808 470K 1/8W
R809 1M 1/10W
R810 100K 1/10W
C806 1UF/25V
R842 10 1/10W
IC801
DRV1 PGND
VDDA DRV2
TIMER GNDA
DIM CT
ISEN SSTCMP
VSEN LCT
OVPT ENA
NC1 NC2
OZ9938
R837 10 1/10W
R815 100K 1/10W
R816 1M 1/10W
R817 36K 1/10W 1%
N.C R844 39K 1/10W
C819 0.022UF/25V
R826 390 1/10W 1%
R841 300 1/10W 1%
17" R841 =390ohm
19" R841 = 300ohm
1Mohm brust frequency:400HZ
R812 10K 1/10W
C803 0.01UF/50V
R811 150K 1/10W
C804 2.2uF/25V
C805 1000PF/50V
R813 1M 1/10W
R814 56K 1/10W
C807 0.01UF/50V
C808 6800PF/50V
C809 0.047UF/50V
C810 560PF/50V
J811 TIN COATED
J812 TIN COATED
J814 TIN COATED
J815 TIN COATED
J816 TIN COATED
J817 TIN COATED
J818 TIN COATED
J819 TIN COATED
J820 TIN COATED
J821 TIN COATED
J822 TIN COATED
J823 TIN COATED
C820 470UF/25V
N.C C829 0.1uF/50V
R828 15 1/8W
R829 15 1/8W
C822 1500PF/50V
C823 1500PF/50V
N.C R840 33K 1/8W
N.C C815 1000P/50V
Q806 AM9945
PT802 80GL19T-36-DN
C825 10PF/3KV
C826 3PF/3KV
C827 270PF/50V
C832 100PF/50V
R830 15K 1/10W
R831 100K 1/10W
R832 3M / 1/2W
R834 3.6K 1/10W 1%
D803 BAV70
C833 100PF/50V
N.C R833 75K 1/10W
R843 1K 1/10W
C837 1UF/25V
CN803 33G8021-2D-U
CN804 33G8021-2D-U
R835 560 1/10W
C838 1UF/25V
D804 BAV99
AOC (Top Victory) Electronics Co., Ltd.
Title
2. FOR 17" 4 LAMPS INVERTER
Size
Document Number
PWPC1742HDE1
Rev A
Date: Monday, May 29, 2006
Sheet 1 of 1

8. PCB Layout

8.1 Main Board

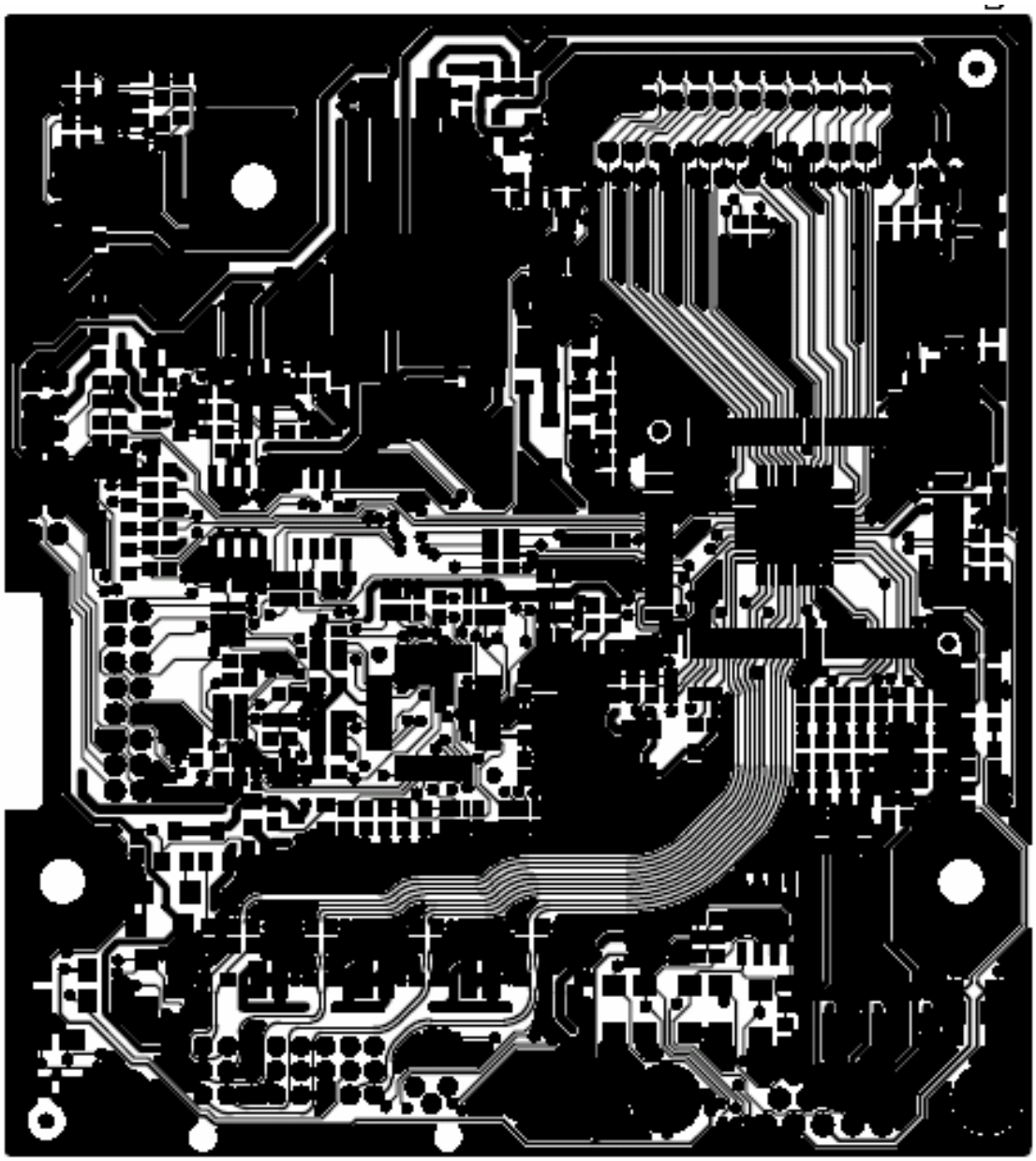

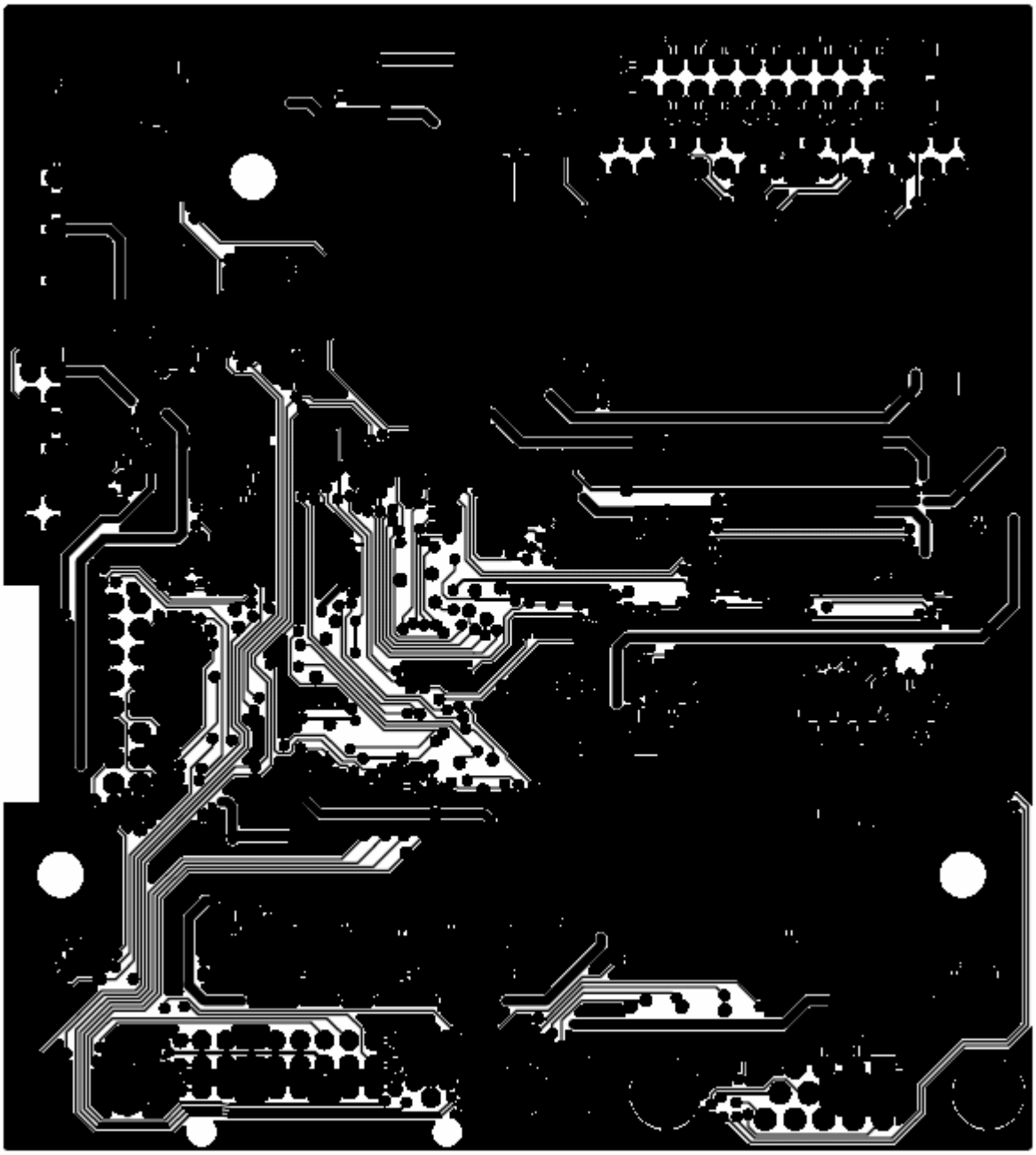

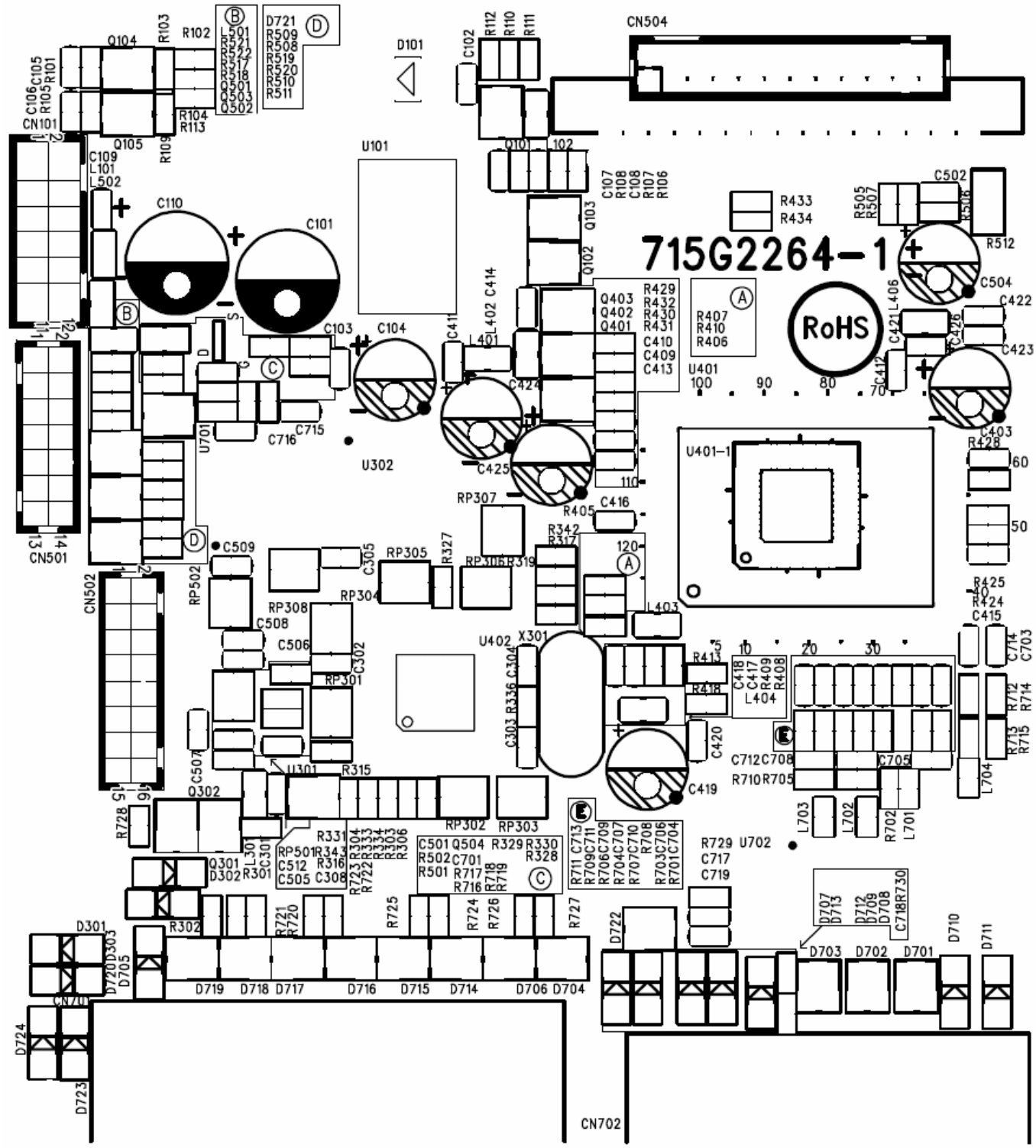
715G2264-1
RoHS
CN504
CN101
CN501
CN502
CN702
U101
U302
U401-1
U402
X301
U702
D101
C101
C110
C104
C425
C419
C420
C502
C504
C422
C423
C403
C509
C508
C506
C507
C302
C301
C305
C303
C304
C336
C416
C415
C424
C414
C411
C412
C421
C426
C406
C715
C716
C713
C711
C709
C707
C710
C708
C706
C704
C705
C703
C714
C712
C718
R512
R433
R434
R505
R507
R506
R407
R410
R406
R428
R425
R424
R405
R342
R317
R319
R327
R336
R413
R418
R409
R408
R417
R315
R331
R343
R316
R304
R333
R334
R303
R306
R723
R722
R721
R720
R725
R724
R726
R727
R729
R717
R718
R719
R716
R501
R502
R329
R330
R328
R711
R709
R706
R704
R707
R708
R703
R701
R710
R705
R712
R714
R713
R715
R702
R728
R302
R301
R109
R104
R113
R103
R102
R105
R101
R106
R107
R108
R110
R111
R112
R102
R103
R109
R502
R501
D301
D302
D303
D705
D720
D724
D723
D719
D718
D717
D716
D715
D714
D706
D704
D722
D703
D702
D701
D710
D711
D707
D713
D712
D709
D708
D721
D509
D508
D519
D520
D510
D511
L501
L502
L101
L404
L403
L402
L401
L406
L703
L702
L701
L704
Q104
Q105
Q101
Q102
Q103
Q403
Q402
Q401
Q501
Q503
Q502
Q301
Q302
U701
RP307
RP305
RP306
RP304
RP308
RP301
RP502
RP501
RP302
RP303

8.2 Power Board

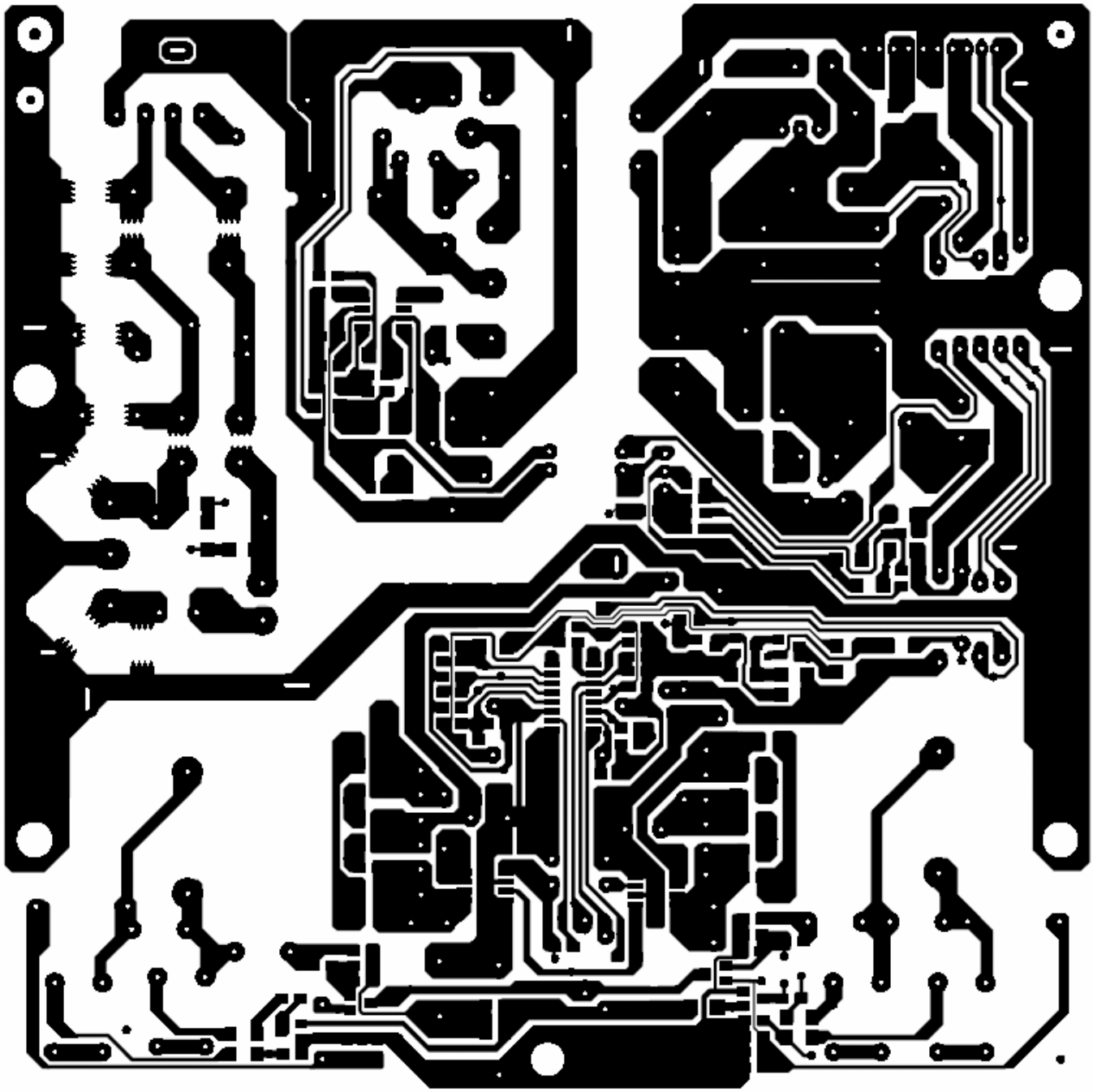

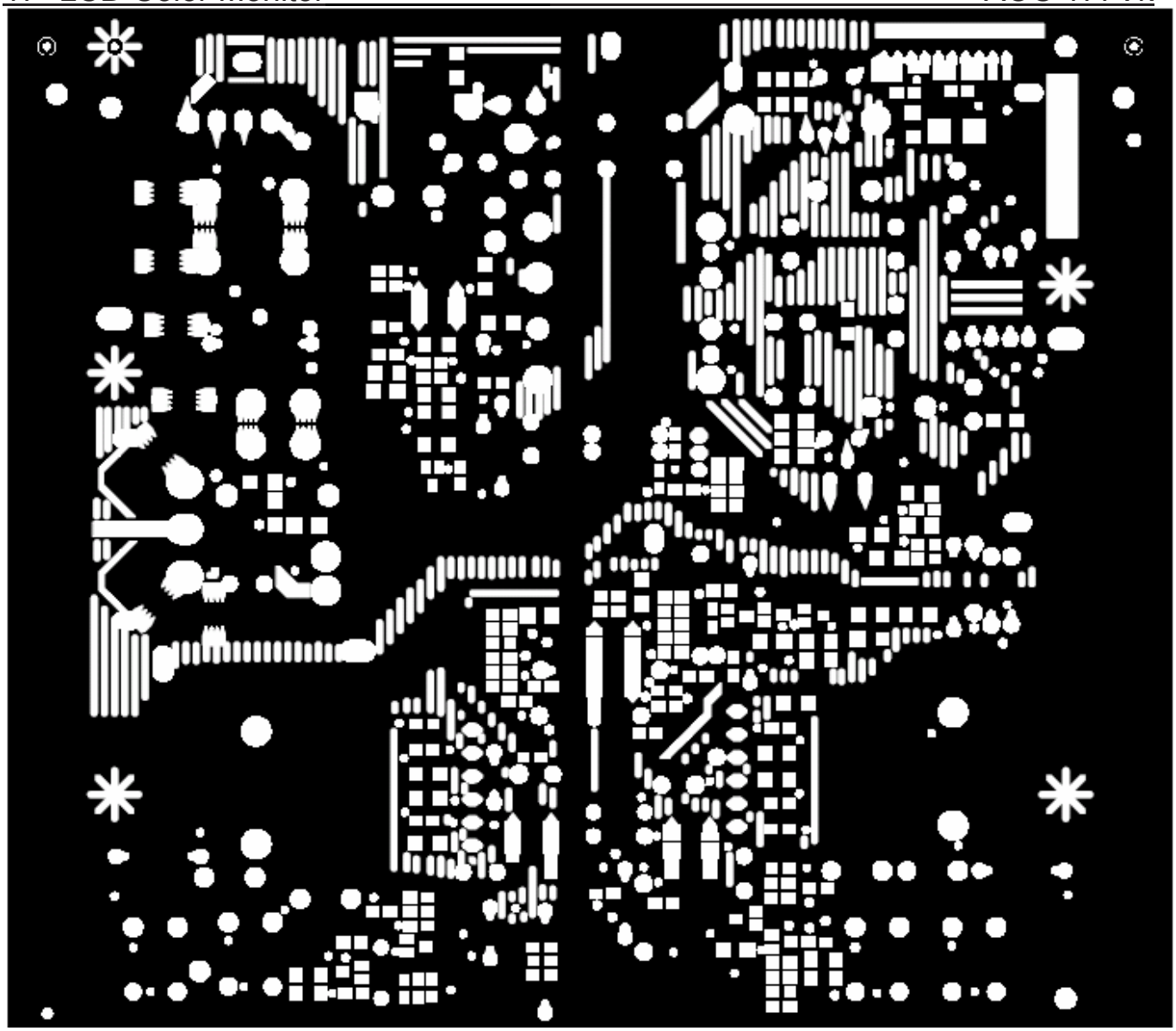

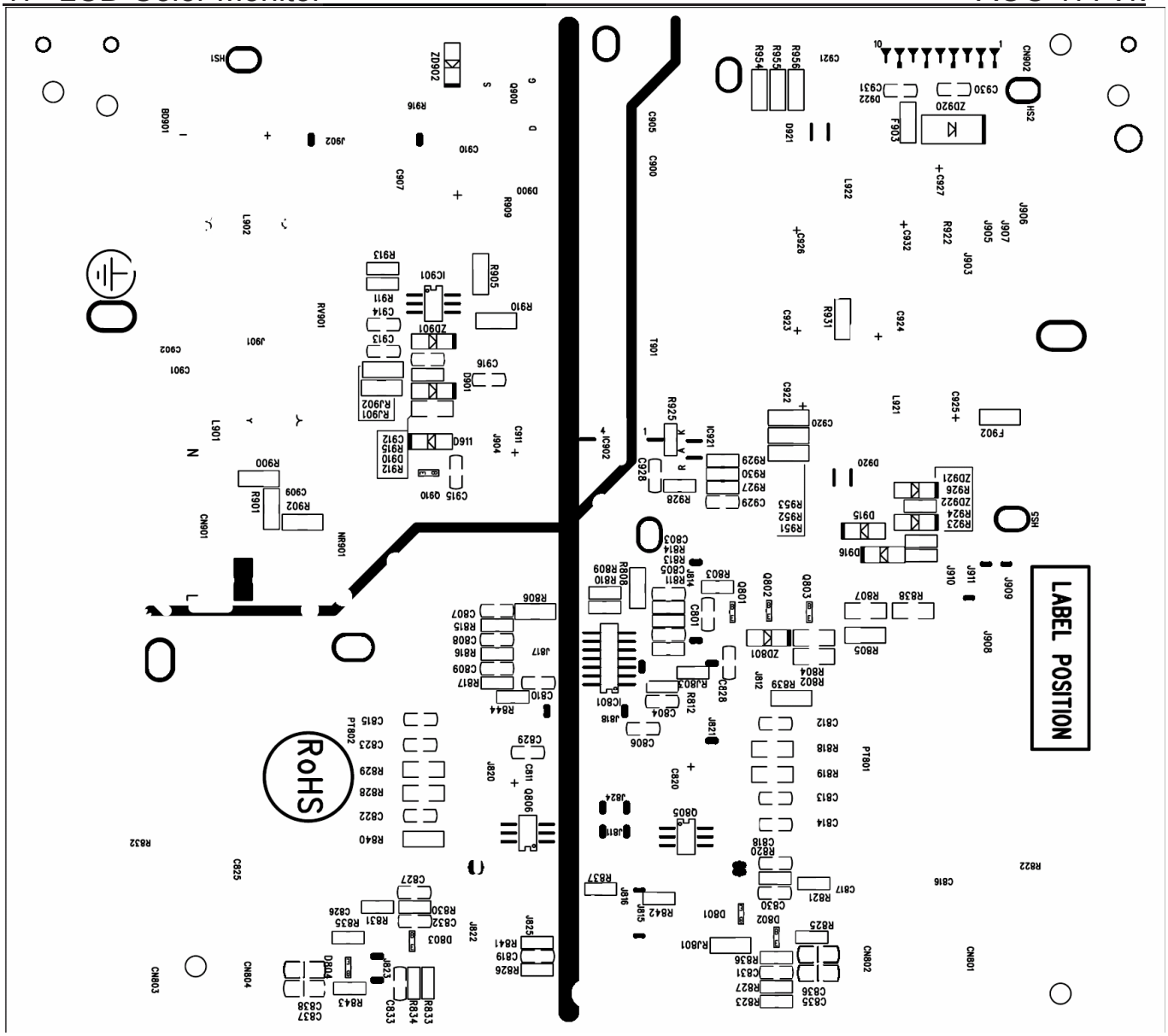
LABEL POSITION
RoHS

8.3 Key Board

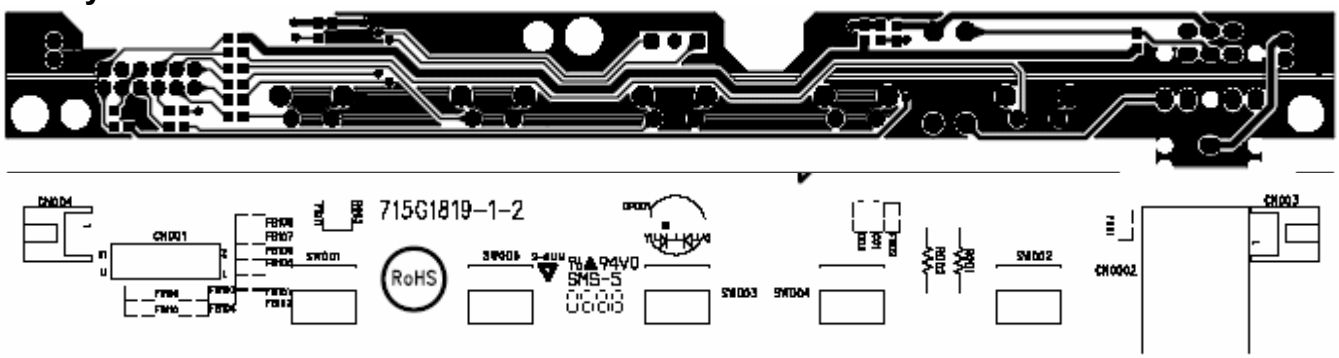

8.4 Audio Board

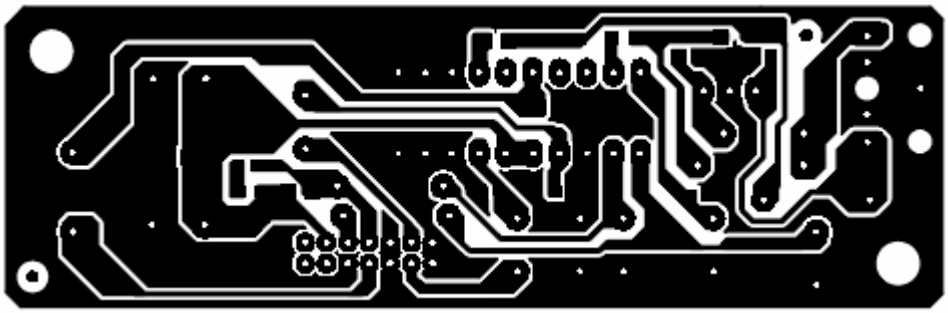

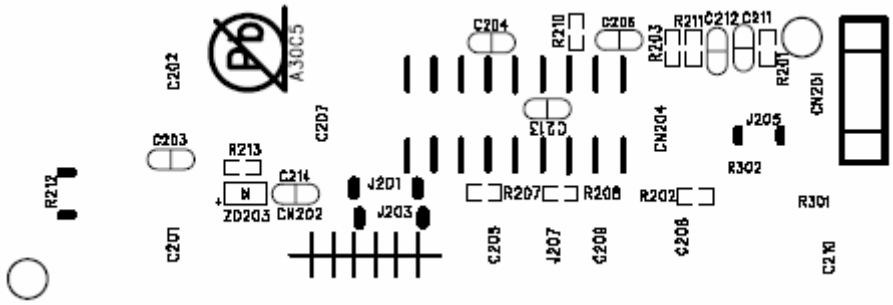

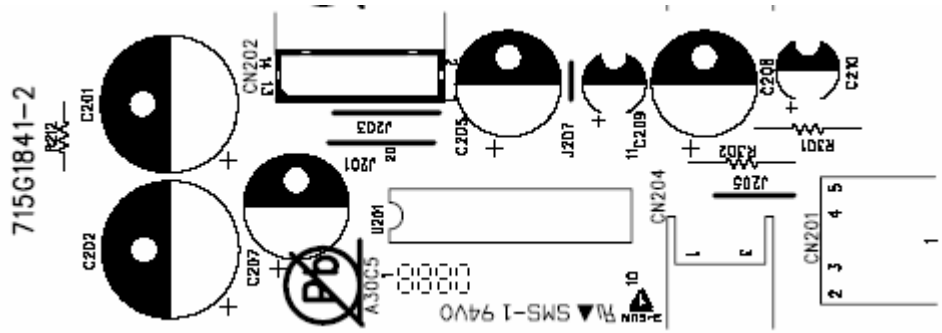

9. Maintainability

9.1 Equipments and Tools Requirement

1. Voltmeter.
2. Oscilloscope.
3. Pattern Generator.
4. DDC Tool with an IBM Compatible Computer.
5. Alignment Tool.
6. LCD Color Analyzer.
7. Service Manual.
8. User Manual.

9.2 Trouble Shooting

9.2.1 Main Board

1. NO SCREEN APPEAR

No power

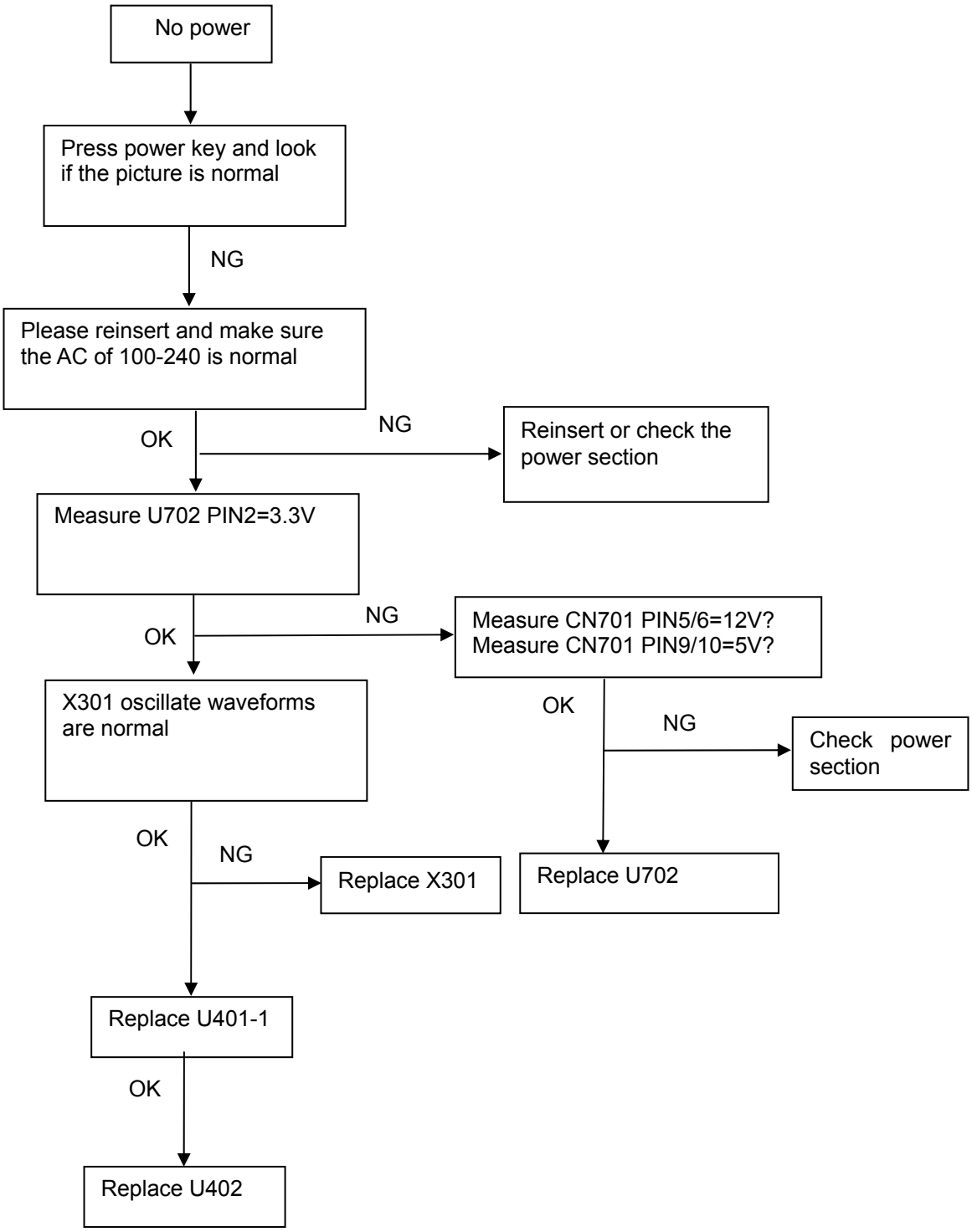

No picture (LED orange)

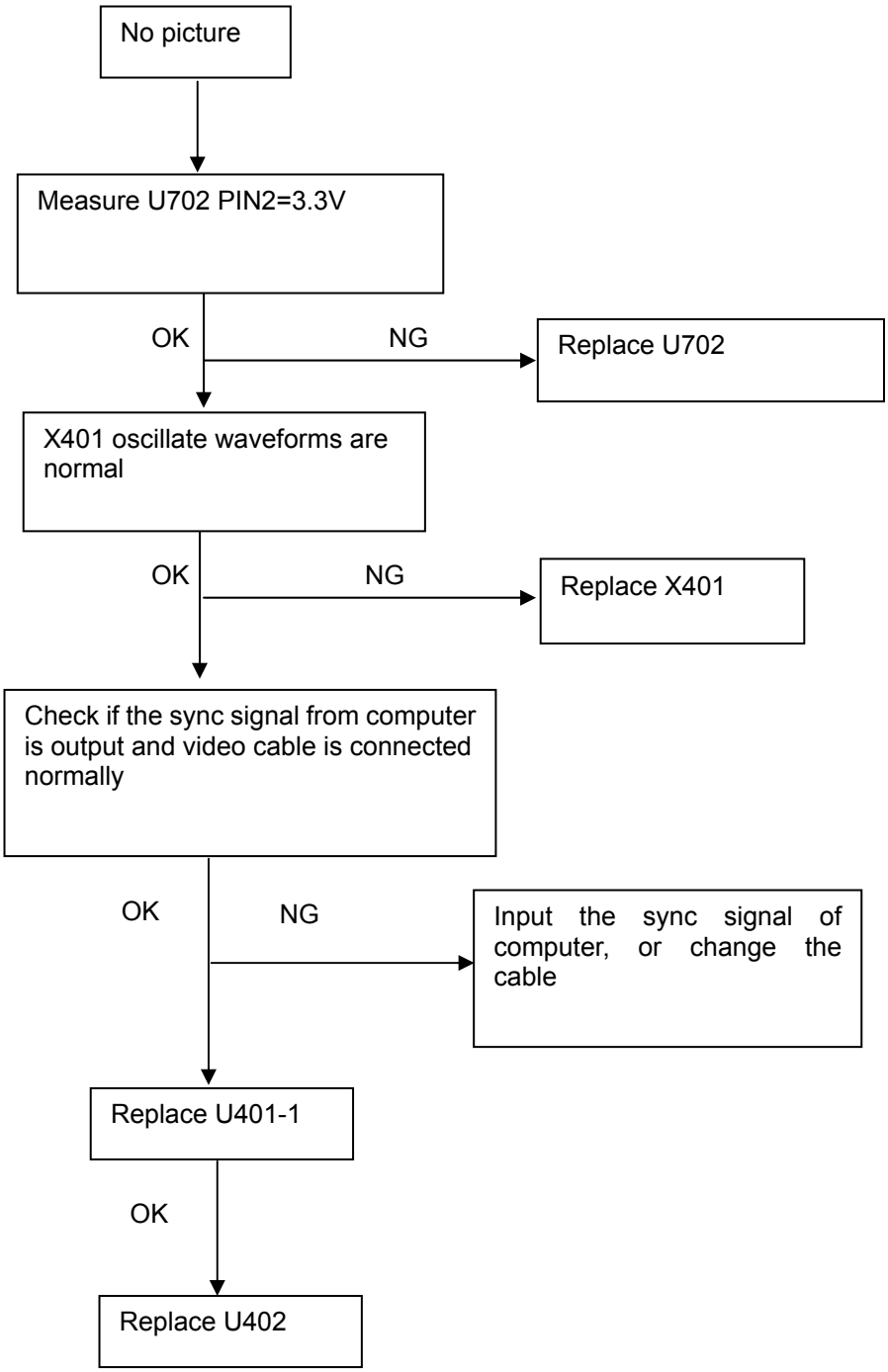

9.2.2 Power Board

1. No Power

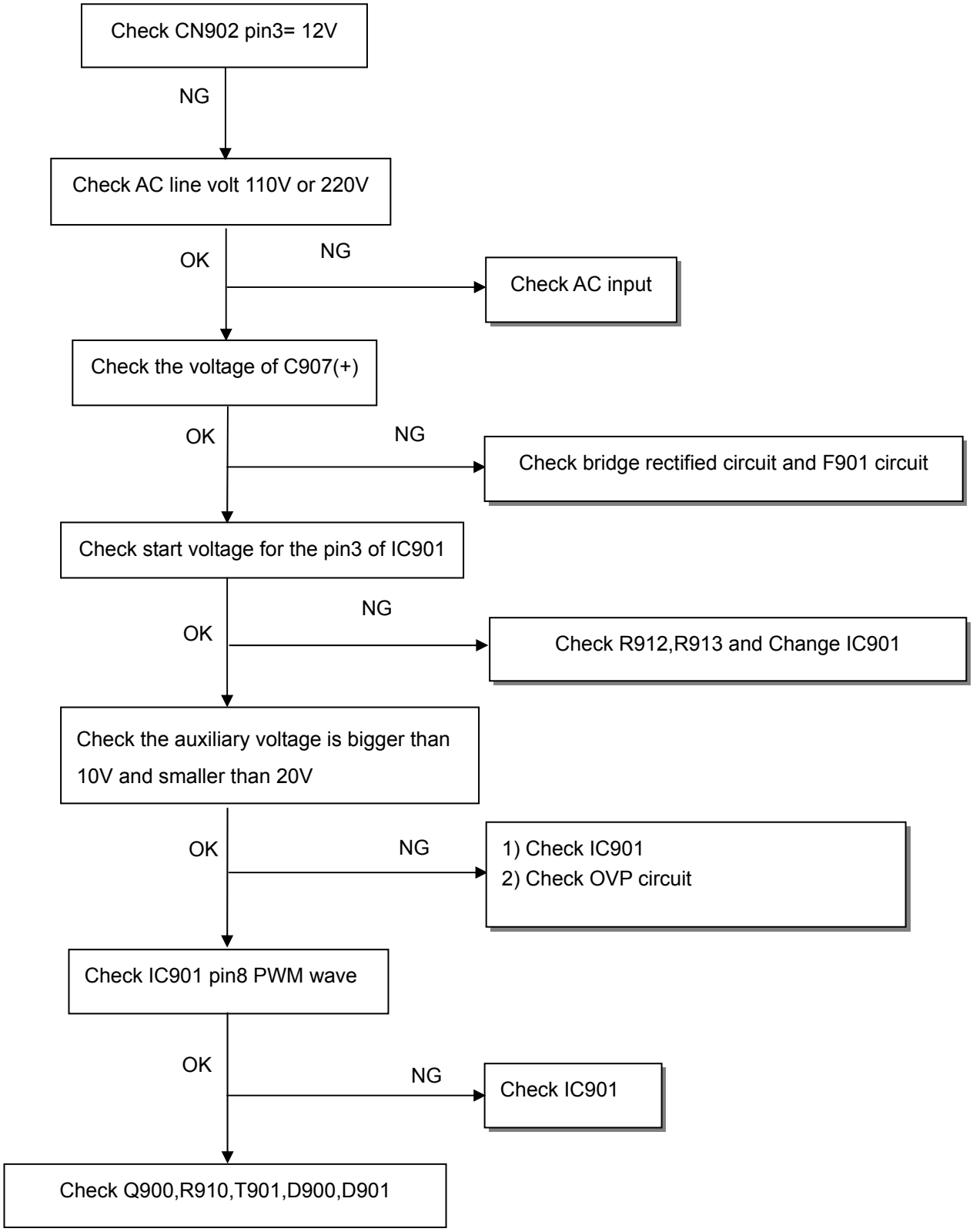

2. W/LED No Backlight

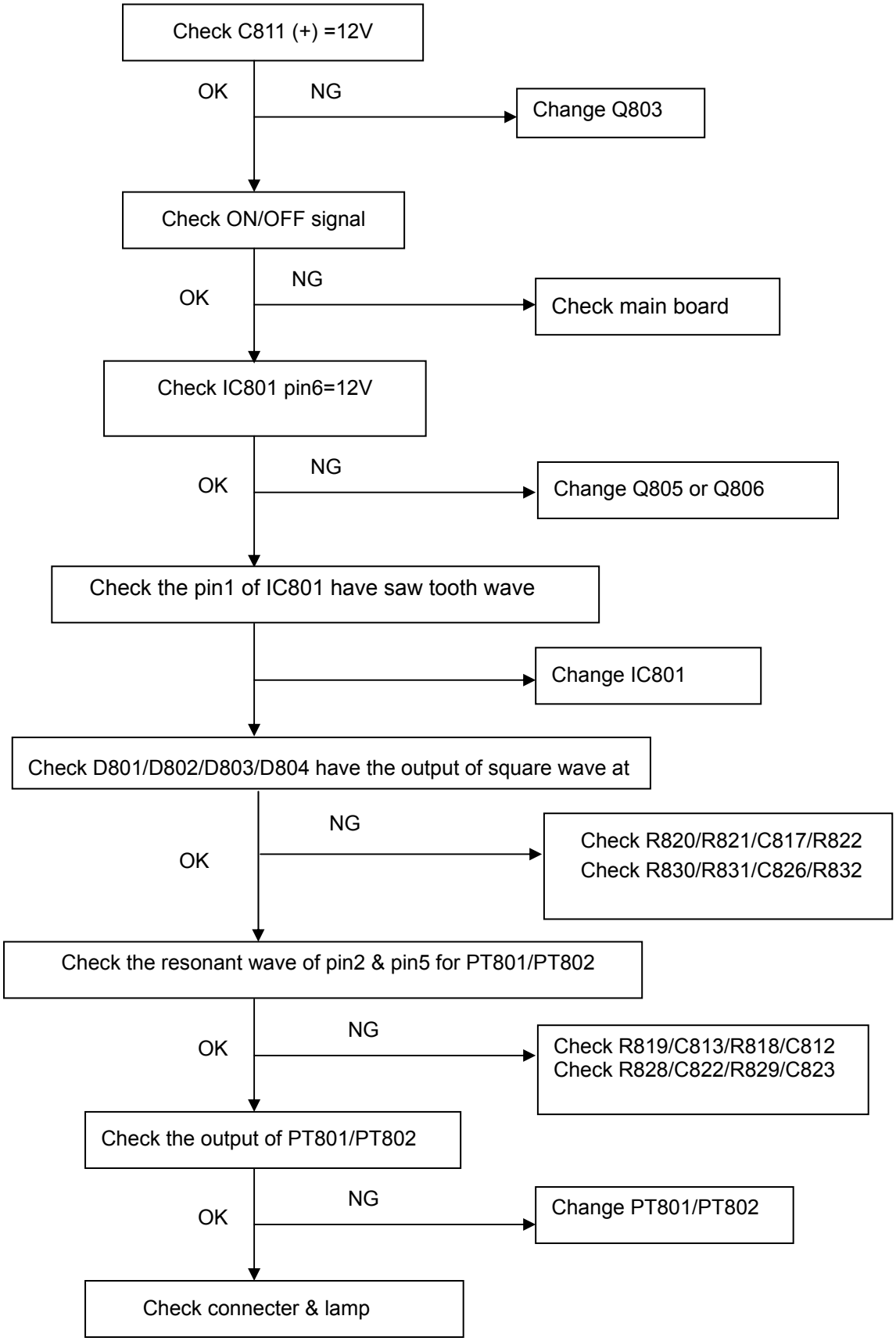

9.2.3 Key Board

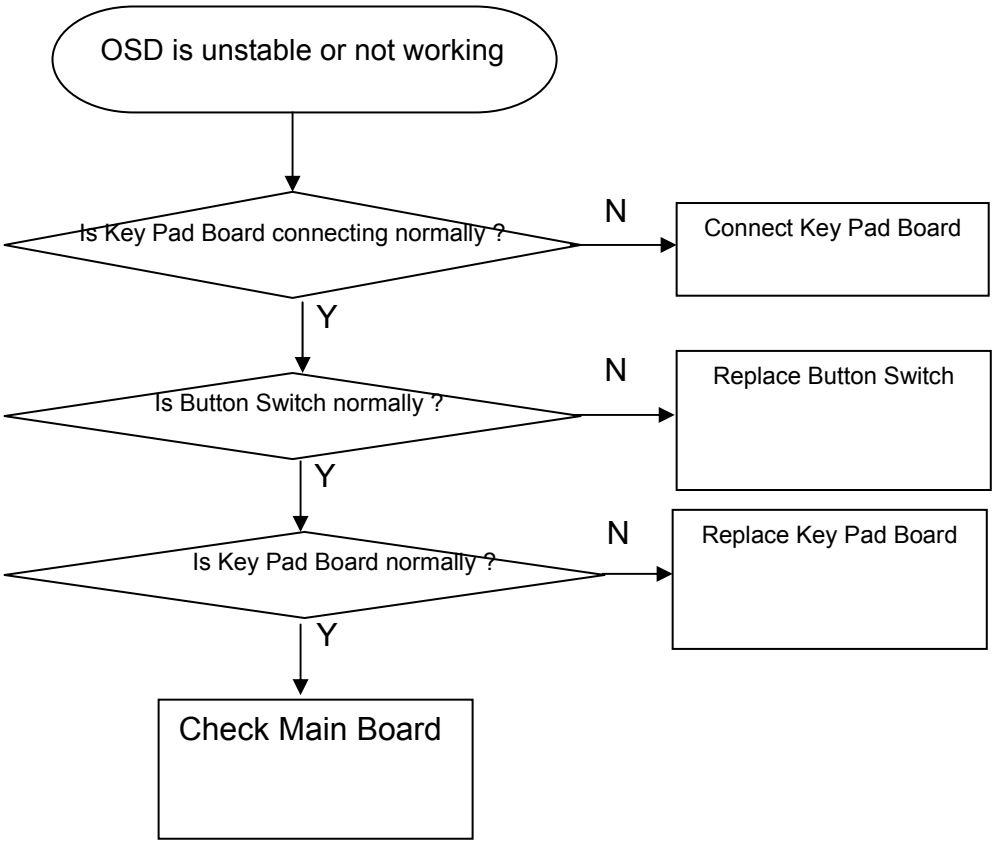

10. White- Balance, Luminance Adjustment

Approximately 30 minutes should be allowed for warm up before proceeding White-Balance adjustment.

1. How to do the Chroma-7120 MEM. Channel setting

   A. Reference to chroma 7120 user guide

   B. Use " **SC**" key and " **NEXT**" key to modify x, y, Y value and use "**ID**" key to modify the TEXT description Following is the procedure to do white-balance adjust

2. Setting the color temp. you want

   A. MEM.CHANNEL 3 (7800 color):

   7800 color temp. parameter is x = 296 ±20, y = 311 ±20, Y = 180 cd/m^2,

   B. MEM.CHANNEL 4 (6500 color):

   6500 color temp. parameter is x = 313±20, y = 329 ±20, Y =180 cd/m^2

3. Into factory mode of 177Vk

   Turn on power, press the MENU button, pull out the power cord, and then plug the power cord. Then the factory OSD will be at the left top of the panel.

4. Bias adjustment:

   Set the **Contrast** to 50; Adjust the **Brightness** to 90.

5. Gain adjustment:

Move cursor to "-F-" and press MENU key

   A. Adjust C2 (7800) color-temperature

      1. Switch the Chroma-7120 to **RGB-Mode** (with press "MODE" button)
      2. Switch the MEM. Channel to Channel 3 (with up or down arrow on chroma 7120)
      3. The LCD-indicator on chroma 7120 will show x = 296 ±20, y = 311 ±20, Y =180 cd/m^2
      4. Adjust the RED of color1 on factory window until chroma 7120 indicator reached the value R=100
      5. Adjust the GREEN of color1 on factory window until chroma 7120 indicator reached the value G=100
      6. Adjust the BLUE of color1 on factory window until chroma 7120 indicator reached the value B=100
      7. Repeat above procedure (item 4,5,6) until chroma 7120 RGB value meet the tolerance =100±5

   B. Adjust C1 (6500) color-temperature

      1. Switch the chroma-7120 to **RGB-Mode** (with press "MODE" button)
      2. Switch the MEM.channel to Channel 4(with up or down arrow on chroma 7120)
      3. The LCD-indicator on chroma 7120 will show x = 313 ±20, y = 329 ±20, Y = 180 cd/m^2
      4. Adjust the RED of color3 on factory window until chroma 7120 indicator reached the value R=100
      5. Adjust the GREEN of color3 on factory window until chroma 7120 indicator reached the value G=100
      6. Adjust the BLUE of color3 on factory window until chroma 7120 indicator reached the value B=100
      7. Repeat above procedure (item 4,5,6) until chroma 7120 RGB value meet the tolerance =100±5

   C. Turn the Power-button off to quit from factory mode.

11. Monitor Exploded View

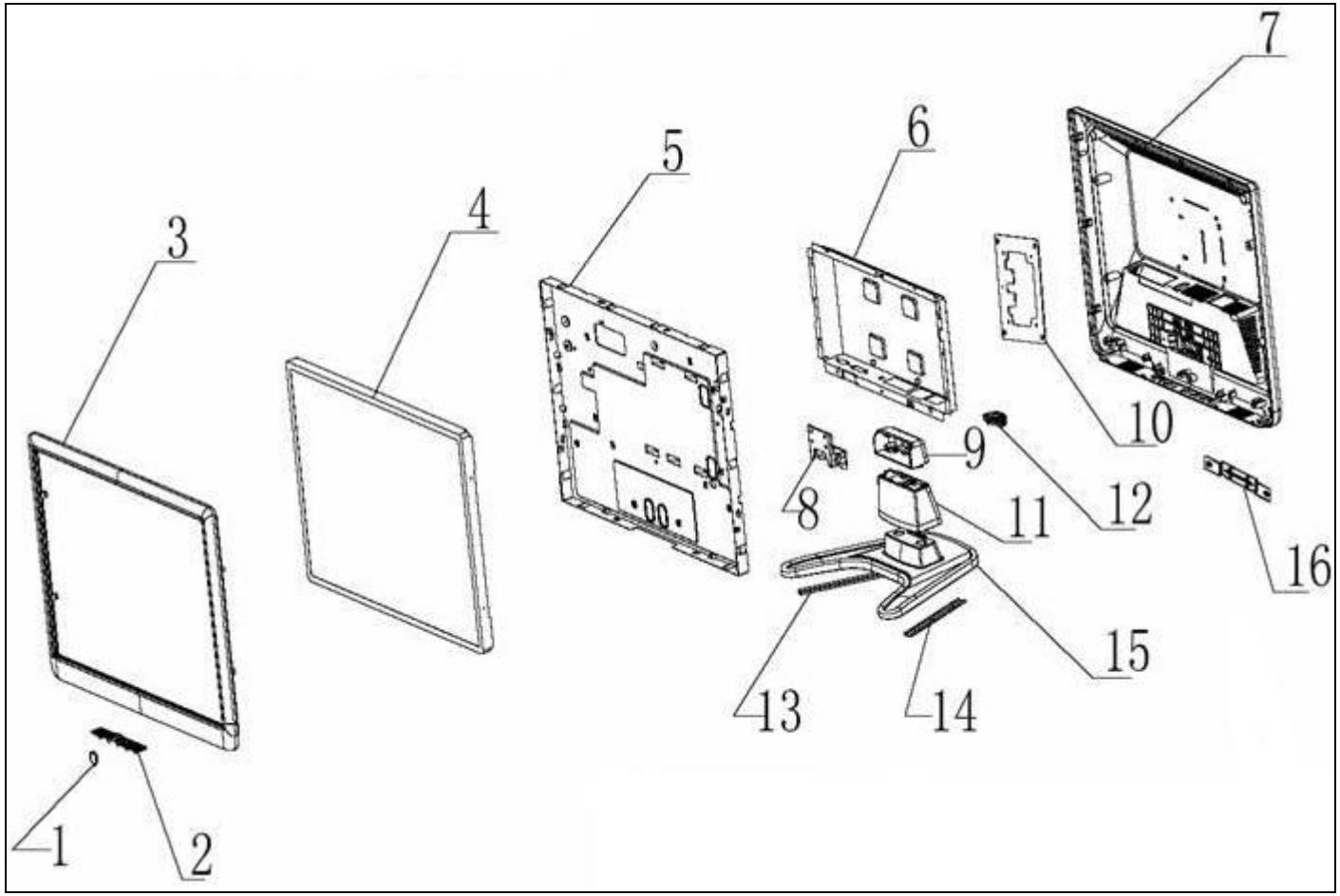

NO.	DESCRIPTION	PART NO.	NO.	DESCRIPTION	PART NO.
1	LENS	Q33G4986	9	STAND-TOP	Q34G1842
2	KEY PAD	Q33G4985	10	VESA BKT	15G5786
3	BEZEL	Q34G1841	11	STAND-BOTTOM	Q34G1843
4	PANEL		12	CABLE	Q33G4987
5	MAINFRAME	H15G8312	13	BASE BKT	Q15G8356
6	SHIELD	Q85G 740	14		
7	BACK COVER	Q34G1840	15	BASE	Q34G1845
8	HINGE	H37G0002	16	HINGE BKT	

12. BOM List

T77SRTDBF1ACANE

Location	Part NO.	Description
	AUPC780KK6AP	AUDIO BOARD
	CBPC7SRTA1H1	MAIN BOARD
	KEPC7HC6	KEY BOARD
	PWPC742HE1P	POWER BOARD
	15G5786 1	BKT VESA
	26G 800504 3H	BARCODE
	40G 58162435A	MANUAL LABEL
	41G780061553A	TCO03 CARD
	44G3798 1	EPS(L)
	44G3798 2	EPS(R)
	44GH600 1	HANDLE2
	50G 600 4	HANDLE1
	52G 1186	SMALL TAPE
	78G 322 1A KL	SPK 8OHM 1.5W KUAIDA
	78G 322 1A KR	SPK 8OHM 1.5W KUAIDA
	89G 17356G553	AUDIO CABLE
	89G 725HAA DB	SIGNAL CABLE
	89G1745GAADVI	SIGNAL CABLE
	89G179E30NE03	FFC CABLE
	89G404A15N YH	POWER CORD
	95G801416TE13	WIRE HARNESS
	D1G1730 8120	SCREW
	D1G1730 8120	SCREW
	M1G 130 5120	SCREW M3X5
	M1G 330 4120	SCREW
	M1G 330 6 47 CR3	SCREW 3X6mm
	M1G1140 6120	SCREW
	M1G2640 10 47 CR3	SCREW
	Q1G 330 8120	SCREW 3X8mm
	Q1G 330 10 47 CR3	SCREW (T3X10)
	Q1G1030 8120	SCREW
	705GH734071	ASS'Y
	750GLS70U315CN	PANEL LTM170EU-L31 8TM
	H15G8312 N 8A	MAIN FRAME
	H40G 17061547A	ID LABEL
	H40G 58161544B	AOC LOGO LABEL
	H44G3798615 5A	CARTON
	H45G 87 4 3 R	PE BAG FOR BASE
	H45G 87 18 2H A	EPE COVER
	H52G6025 16 29	INSULATE SHEET
	H70G200761536A	CD MANUAL
	Q15G8313 1	AC SOCKET BRACKET
	Q33G4985 GM 1L	KEY BUTTON
	Q33G4986 1 1C	POWER LENS
	Q33G4987 GM 1L	CABLE CLAMP
	Q34G1840 GM 1B	REAR COVER
	Q34G1841 YDA1B	BEZEL
	Q41G7800615A26	QSG
	Q45G 76 28 H A	PE BAG FOR MANUAL
	Q45G 88606 14 R	PE BAG
	Q52G 1185 65	MIDDLE TAPE
	Q85G 740 1 1A	SHIELD
CN202	33G802414D H	2*7PIN DUAL ROW RIGHT A

C208	67G215V471 3N	ELCAP 470UF +-20% 16V 1
CN201	88G 30214K	PHONE JACK 5PIN
U201	Q90G6093 2	HEAT SINK
U201	56G 616 1	TDA7496L BY ST
R207	61G0603102	RST CHIPR 1KOHM +-5% 1/
R208	61G0603102	RST CHIPR 1KOHM +-5% 1/
R201	61G0603183	RST CHIPR 18KOHM +-5% 1
R203	61G0603183	RST CHIPR 18KOHM +-5% 1
R210	61G0603203	RST CHIPR 20KOHM +-5% 1
R211	61G0603203	RST CHIPR 20KOHM +-5% 1
R202	61G0603204	RST CHIPR 200KOHM +-5%
C211	65G0805101 31	CHIP 100PF 50V NPD 0805
C212	65G0805101 31	CHIP 100PF 50V NPD 0805
C203	65G0805104 32	CAP 0805 0.1U +-10% 50V
C213	65G0805104 32	CAP 0805 0.1U +-10% 50V
C204	65G0805474 22	CHIP 0.47UF 25V X7R 080
C206	65G0805474 22	CHIP 0.47UF 25V X7R 080
	715G1841 2	AUDIO BOARD PCB
J201	95G 90 23	TINCOATEDCOPPER
J203	95G 90 23	TINCOATEDCOPPER
J205	95G 90 23	TINCOATEDCOPPER
J207	95G 90 23	TINCOATEDCOPPER
R301	61G172S18352T	RST CFR 18KOHM +-5% 1/4
R302	61G172S18352T	RST CFR 18KOHM +-5% 1/4
R212	61G172S22452T	RST CFR 220KOHM +-5% 1/
C209	67G 2151007NT	ELCAP 10UF +-20% 50V 10
C210	67G 2151007NT	ELCAP 10UF +-20% 50V 10
C201	67G215B4713HT	ELCAP 470UF +-20% 16V 1
C202	67G215B4713HT	ELCAP 470UF +-20% 16V 1
C205	67G215B4713HT	ELCAP 470UF +-20% 16V 1
C207	67G215B4713HT	ELCAP 470UF +-20% 16V 1
CN501	33G801714A BH	PIN HEADER 2*7 R/A
CN504	33G801930F CH JS	FFC CONN .1.0MM 30P
CN101	33G8027 12	WAFER 2*6P 2.0MM R/A
CN502	33G8027 16	WAFER 16PIN 2.0mm DIP
	40G 45762412B	CBPC LABEL
C101	67G215V221 4N	ELCAP 220UF +-20% 25V 1
C110	67G215V221 4N	ELCAP 220UF +-20% 25V 1
C104	67G305V101 3	ELCAP 100UF +-20% 16V 1
C419	67G305V101 3	ELCAP 100UF +-20% 16V 1
C424	67G305V101 3	ELCAP 100UF +-20% 16V 1
C425	67G305V101 3	ELCAP 100UF +-20% 16V 1
C426	67G305V101 3	ELCAP 100UF +-20% 16V 1
C504	67G305V101 3	ELCAP 100UF +-20% 16V 1
CN702	88G 35315F HD	D-SUB CONN F ATTACHED
CN701	88G 35424F N	DVI 24PIN CONN F
X301	93G 22 45 J	24MHZ/30PF/49US
U401-1	56G 562533	IC RTD2525L-LF
U101	56G 563 25	A1C1084-33PE
U402	56G1125701 X	MCU RTD2120L-LFLQFP48
U701	56G1133 34	M24C02-WMN6TP
U702	56G1133 34	M24C02-WMN6TP
U302	56G1133 56	M24C16-WMN6TP
Q102	57G 417 4	PMBS3904/PHILIPS-SMT(04
Q103	57G 417 4	PMBS3904/PHILIPS-SMT(04
Q104	57G 417 4	PMBS3904/PHILIPS-SMT(04

Q105	57G 417 4	PMBS3904/PHILIPS-SMT(04
Q301	57G 417 6	PMBS3906/PHILIPS-SMT(06
Q302	57G 417 6	PMBS3906/PHILIPS-SMT(06
Q401	57G 417 6	PMBS3906/PHILIPS-SMT(06
Q402	57G 417 6	PMBS3906/PHILIPS-SMT(06
Q403	57G 417 6	PMBS3906/PHILIPS-SMT(06
Q501	57G 417 6	PMBS3906/PHILIPS-SMT(06
Q502	57G 417 6	PMBS3906/PHILIPS-SMT(06
Q504	57G 759 2	RK7002
Q101	57G 763 1	AO3401L SOT23 BY AOS(A1
RP307	61G 125101 8	RST CHIPR 100 OHM +-5%
RP308	61G 125101 8	RST CHIPR 100 OHM +-5%
RP501	61G 125101 8	RST CHIPR 100 OHM +-5%
RP502	61G 125101 8	RST CHIPR 100 OHM +-5%
RP301	61G 125472 8	RST CHIPR 4.7KOHM +-5%
RP302	61G 125472 8	RST CHIPR 4.7KOHM +-5%
RP303	61G 125472 8	RST CHIPR 4.7KOHM +-5%
RP304	61G 125472 8	RST CHIPR 4.7KOHM +-5%
RP305	61G 125472 8	RST CHIPR 4.7KOHM +-5%
RP306	61G 125472 8	RST CHIPR 4.7KOHM +-5%
R110	61G0603000	RST CHIPR 0 OHM +-5% 1/
R327	61G0603000	RST CHIPR 0 OHM +-5% 1/
R328	61G0603000	RST CHIPR 0 OHM +-5% 1/
R429	61G0603000	RST CHIPR 0 OHM +-5% 1/
R430	61G0603000	RST CHIPR 0 OHM +-5% 1/
R431	61G0603000	RST CHIPR 0 OHM +-5% 1/
R432	61G0603000	RST CHIPR 0 OHM +-5% 1/
R433	61G0603000	RST CHIPR 0 OHM +-5% 1/
R434	61G0603000	RST CHIPR 0 OHM +-5% 1/
R517	61G0603000	RST CHIPR 0 OHM +-5% 1/
R518	61G0603000	RST CHIPR 0 OHM +-5% 1/
R720	61G0603000	RST CHIPR 0 OHM +-5% 1/
R721	61G0603000	RST CHIPR 0 OHM +-5% 1/
R722	61G0603000	RST CHIPR 0 OHM +-5% 1/
R723	61G0603000	RST CHIPR 0 OHM +-5% 1/
R724	61G0603000	RST CHIPR 0 OHM +-5% 1/
R725	61G0603000	RST CHIPR 0 OHM +-5% 1/
R726	61G0603000	RST CHIPR 0 OHM +-5% 1/
R727	61G0603000	RST CHIPR 0 OHM +-5% 1/
R319	61G0603101	RST CHIPR 100 OHM +-5%
R331	61G0603101	RST CHIPR 100 OHM +-5%
R333	61G0603101	RST CHIPR 100 OHM +-5%
R334	61G0603101	RST CHIPR 100 OHM +-5%
R343	61G0603101	RST CHIPR 100 OHM +-5%
R424	61G0603101	RST CHIPR 100 OHM +-5%
R425	61G0603101	RST CHIPR 100 OHM +-5%
R707	61G0603101	RST CHIPR 100 OHM +-5%
R712	61G0603101	RST CHIPR 100 OHM +-5%
R714	61G0603101	RST CHIPR 100 OHM +-5%
R718	61G0603101	RST CHIPR 100 OHM +-5%
R719	61G0603101	RST CHIPR 100 OHM +-5%
R329	61G0603102	RST CHIPR 1KOHM +-5% 1/
R501	61G0603102	RST CHIPR 1KOHM +-5% 1/
R106	61G0603103	RST CHIPR 10KOHM +-5% 1
R107	61G0603103	RST CHIPR 10KOHM +-5% 1
R502	61G0603103	RST CHIPR 10KOHM +-5% 1

R108	61G0603104	RST CHIPR 100KOHM +-5%
R509	61G0603121	RST CHIPR 120 OHM +-5%
R510	61G0603121	RST CHIPR 120 OHM +-5%
R330	61G0603202	RST CHIPR 2KOHM +-5% 1/
R713	61G0603202	RST CHIPR 2KOHM +-5% 1/
R715	61G0603202	RST CHIPR 2KOHM +-5% 1/
R716	61G0603202	RST CHIPR 2KOHM +-5% 1/
R717	61G0603202	RST CHIPR 2KOHM +-5% 1/
R729	61G0603202	RST CHIPR 2KOHM +-5% 1/
R730	61G0603202	RST CHIPR 2KOHM +-5% 1/
R105	61G0603221	RST CHIPR 220 OHM +-5%
R701	61G0603361	RST CHIPR 360 OHM +-5%
R703	61G0603361	RST CHIPR 360 OHM +-5%
R706	61G0603361	RST CHIPR 360 OHM +-5%
R709	61G0603361	RST CHIPR 360 OHM +-5%
R711	61G0603361	RST CHIPR 360 OHM +-5%
R101	61G0603472	RST CHIPR 4.7KOHM +-5%
R102	61G0603472	RST CHIPR 4.7KOHM +-5%
R104	61G0603472	RST CHIPR 4.7KOHM +-5%
R113	61G0603472	RST CHIPR 4.7KOHM +-5%
R301	61G0603472	RST CHIPR 4.7KOHM +-5%
R302	61G0603472	RST CHIPR 4.7KOHM +-5%
R317	61G0603472	RST CHIPR 4.7KOHM +-5%
R342	61G0603472	RST CHIPR 4.7KOHM +-5%
R506	61G0603472	RST CHIPR 4.7KOHM +-5%
R508	61G0603472	RST CHIPR 4.7KOHM +-5%
R511	61G0603472	RST CHIPR 4.7KOHM +-5%
R521	61G0603472	RST CHIPR 4.7KOHM +-5%
R522	61G0603472	RST CHIPR 4.7KOHM +-5%
R728	61G0603472	RST CHIPR 4.7KOHM +-5%
R336	61G0603682	RST CHIPR 6.8KOHM +-5%
R702	61G0603750 9F	RST CHIPR 75 OHM +-1% 1
R705	61G0603750 9F	RST CHIPR 75 OHM +-1% 1
R710	61G0603750 9F	RST CHIPR 75 OHM +-1% 1
R512	61G1206472	RST CHIPR 4.7KOHM +-5%
C303	65G0603100 31	CHIP 10PF+-0.5PF 50V NP
C304	65G0603100 31	CHIP 10PF+-0.5PF 50V NP
C102	65G0603101 32	100PF +-10% 50V X7R
C103	65G0603101 32	100PF +-10% 50V X7R
C106	65G0603101 32	100PF +-10% 50V X7R
C107	65G0603101 32	100PF +-10% 50V X7R
C108	65G0603101 32	100PF +-10% 50V X7R
C109	65G0603101 32	100PF +-10% 50V X7R
C302	65G0603101 32	100PF +-10% 50V X7R
C308	65G0603101 32	100PF +-10% 50V X7R
C411	65G0603101 32	100PF +-10% 50V X7R
C414	65G0603101 32	100PF +-10% 50V X7R
C415	65G0603101 32	100PF +-10% 50V X7R
C416	65G0603101 32	100PF +-10% 50V X7R
C420	65G0603101 32	100PF +-10% 50V X7R
C421	65G0603101 32	100PF +-10% 50V X7R
C423	65G0603101 32	100PF +-10% 50V X7R
C502	65G0603101 32	100PF +-10% 50V X7R
C505	65G0603101 32	100PF +-10% 50V X7R
C506	65G0603101 32	100PF +-10% 50V X7R
C507	65G0603101 32	100PF +-10% 50V X7R

C508	65G0603101 32	100PF +-10% 50V X7R
C512	65G0603101 32	100PF +-10% 50V X7R
C701	65G0603101 32	100PF +-10% 50V X7R
C717	65G0603101 32	100PF +-10% 50V X7R
C305	65G0603104 12	0.1UF +-10% 16V X7R
C105	65G0603105 12	CHIP 1UF 16VX7R 0603
C705	65G0603150 31	CHIP 15PF 50V NPO
C708	65G0603150 31	CHIP 15PF 50V NPO
C712	65G0603150 31	CHIP 15PF 50V NPO
C715	65G0603151 31	CAP 0603 150PF 50V NPO
C716	65G0603151 31	CAP 0603 150PF 50V NPO
C718	65G0603151 31	CAP 0603 150PF 50V NPO
C719	65G0603151 31	CAP 0603 150PF 50V NPO
C704	65G0603473 32	CAP 0603 0.047UFK 50V X
C706	65G0603473 32	CAP 0603 0.047UFK 50V X
C709	65G0603473 32	CAP 0603 0.047UFK 50V X
C710	65G0603473 32	CAP 0603 0.047UFK 50V X
C711	65G0603473 32	CAP 0603 0.047UFK 50V X
C713	65G0603473 32	CAP 0603 0.047UFK 50V X
C501	65G0805105 12	1UF +-10% 16V X7R
L102	71G 56K121 M	CHIP BEAD
L101	71G 56Z601	CHIP BEAD 600 OHM 0805
L401	71G 56Z601	CHIP BEAD 600 OHM 0805
L402	71G 56Z601	CHIP BEAD 600 OHM 0805
L404	71G 56Z601	CHIP BEAD 600 OHM 0805
L406	71G 56Z601	CHIP BEAD 600 OHM 0805
L501	71G 56Z601	CHIP BEAD 600 OHM 0805
L502	71G 56Z601	CHIP BEAD 600 OHM 0805
L701	71G 59C300	30 OHM BEAD
L702	71G 59C300	30 OHM BEAD
L703	71G 59C300	30 OHM BEAD
L704	71G 59C300	30 OHM BEAD
D705	93G 39147	TZMC5V6
D707	93G 39147	TZMC5V6
D710	93G 39147	TZMC5V6
D711	93G 39147	TZMC5V6
D712	93G 39147	TZMC5V6
D713	93G 39147	TZMC5V6
D720	93G 39147	TZMC5V6
D723	93G 39147	TZMC5V6
D724	93G 39147	TZMC5V6
D721	93G 64 42 P	BAV70 SOT-23
D722	93G 64 42 P	BAV70 SOT-23
D301	93G 6432V	LL4148-GS08
D302	93G 6432V	LL4148-GS08
D303	93G 6432V	LL4148-GS08
D701	93G 6433P	BAV99
D702	93G 6433P	BAV99
D703	93G 6433P	BAV99
D704	93G 6433P	BAV99
D706	93G 6433P	BAV99
D714	93G 6433P	BAV99
D715	93G 6433P	BAV99
D716	93G 6433P	BAV99
D717	93G 6433P	BAV99
D718	93G 6433P	BAV99

D719	93G 6433P	BAV99
D101	93G1004 3	SS14
	715G2264 1	MAIN BOARD PCB
CN003	33G3802 2	WAFER 2.0MM 2P
CN004	33G3802 2	WAFER 2.0MM 2P
CN001	33G8027 12	WAFER 2*6P 2.0MM R/A
SW001	77G 602 1 CJ	TACT SWITCH TSVB-2
SW002	77G 602 1 CJ	TACT SWITCH TSVB-2
SW003	77G 602 1 CJ	TACT SWITCH TSVB-2
SW004	77G 602 1 CJ	TACT SWITCH TSVB-2
SW005	77G 602 1 CJ	TACT SWITCH TSVB-2
DP001	81G 12 1F GP	LED
CN002	88G 30217T TO	PHONE JACK+SWITCH
R001	61G172S51152T	RST CFR 510 OHM +-5％ 1
R002	61G172S51152T	RST CFR 510 OHM +-5％ 1
C01	65G0603101 31	CAP 0603 100PF 50V NPO
C02	65G0603101 31	CAP 0603 100PF 50V NPO
FB01	71G 59B121	TB160808B
FB02	71G 59B121	TB160808B
FB101	71G 59B601 EA	CHIP BEAD 600 OHM
FB102	71G 59B601 EA	CHIP BEAD 600 OHM
FB103	71G 59B601 EA	CHIP BEAD 600 OHM
FB104	71G 59B601 EA	CHIP BEAD 600 OHM
FB105	71G 59B601 EA	CHIP BEAD 600 OHM
FB106	71G 59B601 EA	CHIP BEAD 600 OHM
FB107	71G 59B601 EA	CHIP BEAD 600 OHM
FB108	71G 59B601 EA	CHIP BEAD 600 OHM
FB109	71G 59B601 EA	CHIP BEAD 600 OHM
FB110	71G 59B601 EA	CHIP BEAD 600 OHM
FB111	71G 59B601 EA	CHIP BEAD 600 OHM
	715G1819 1 2	KEY BOARD PCB
L901	S73G17476V	FIL TER
T901	S80GL17T33V	TRANSFORMER
PT801	S80GL17T36V	TRANSFORMER
PT802	S80GL17T36V	TRANSFORMER
CN801	33G8021 2E U	WAFER
CN802	33G8021 2E U	WAFER
CN803	33G8021 2E U	WAFER
CN804	33G8021 2E U	WAFER
	40G 45762412B	CBPC LABEL
IC902	56G 139 3A	PC123Y22FZOF
NR901	61G 58080 WT	RST NTCR 8 OHM
R916	61G152M43864L	RST MOFR 0.43 OHM +-5%
C909	63G107K474 US	0.47UF +-10%
C817	65G 3J3096ET	3PF,J,3KV,Z5P
C826	65G 3J3096ET	3PF,J,3KV,Z5P
C816	65G 6J1206ET	CAP 12PF 5% SL 6KV TDK
C825	65G 6J1206ET	CAP 12PF 5% SL 6KV TDK
C900	65G306M2222BP	CAP Y1 2200PF M 250VAC
C905	65G306M3322BP	3300PF 20%
C907	67G215Z10115K	ELCAP 100UF +-20% 450V
L902	73G 174 65 H	LINE FILTER
L921	73G 253 91 H	CHOKE COIL
L922	73G 253 91 H	CHOKE COIL
F901	84G 55 5	FUSE 2.50A 250V
CN901	87G 501 32 S	AC SOCKET

D900	93G1100 1152T	DIODE PR1007R 1A/1000V
CN902	95G8014 12 42	HARNESS
	Q51G 6 4508	RTV
HS6	Q85G0043 1 S	SHIELD
C901	65G305M1022E2	1000P 400VAC/250VAC
C902	65G305M1022E2	1000P 400VAC/250VAC
C926	67G215V1023HS	ELCAP L105℃ 1000UF M 1
C927	67G215V471 3H	CAP 105℃ 470UF M16V
C932	67G215V471 3H	CAP 105℃ 470UF M16V
C811	67G215Y4714HV	CAP 105℃ 470UF M 25V
C820	67G215Y4714HV	CAP 105℃ 470UF M 25V
C925	67G215Y4714HV	CAP 105℃ 470UF M 25V
C922	67G215Y6814HV	CAP 105℃ 680UF M 25V
C923	67G215Y6814HV	CAP 105℃ 680UF M 25V
C924	67G215Y6814HV	CAP 105℃ 680UF M 25V
BD901	93G 50460502	KBP206G
D922	93G3006 1 1	31DQ06FC3
	705G 909 11 06	R909 ASS'Y
	705G 920 06 14	D920 ASS'Y
	705GH757002	Q900 ASS'Y
IC901	56G 379 61	LD7575PS SOP-8
IC801	56G 608 10	OZ9938GN
Q801	57G 417 4	PMBS3904/PHILIPS-SMT(04
Q802	57G 417 4	PMBS3904/PHILIPS-SMT(04
Q803	57G 417 4	PMBS3904/PHILIPS-SMT(04
Q805	57G 763 14	AM9945N
Q806	57G 763 14	AM9945N
R837	61G0805100	RST CHIPR 10 OHM +-5% 1
R842	61G0805100	RST CHIPR 10 OHM +-5% 1
R821	61G0805100 3F	RST CHIPR 100KOHM +-1%
R831	61G0805100 3F	RST CHIPR 100KOHM +-1%
R911	61G0805100 3F	RST CHIPR 100KOHM +-1%
R927	61G0805101	RST CHIPR 100 OHM +-5%
R930	61G0805101	RST CHIPR 100 OHM +-5%
R836	61G0805102	RST CHIPR 1KOHM +-5% 1/
R843	61G0805102	RST CHIPR 1KOHM +-5% 1/
R913	61G0805102	RST CHIPR 1KOHM +-5% 1/
R925	61G0805102	RST CHIPR 1KOHM +-5% 1/
R928	61G0805102	RST CHIPR 1KOHM +-5% 1/
R803	61G0805103	RST CHIPR 10KOHM +-5% 1
R812	61G0805103	RST CHIPR 10KOHM +-5% 1
R915	61G0805103	RST CHIPR 10KOHM +-5% 1
R923	61G0805103	RST CHIPR 10KOHM +-5% 1
R810	61G0805104	RST CHIPR 100KOHM +-5%
R815	61G0805104	RST CHIPR 100KOHM +-5%
R809	61G0805105	RST CHIPR 1MOHM +-5% 1/
R813	61G0805105	RST CHIPR 1MOHM +-5% 1/
R816	61G0805105	RST CHIPR 1MOHM +-5% 1/
R820	61G0805150 2F	RST CHIPR 15KOHM +-1% 1
R830	61G0805150 2F	RST CHIPR 15KOHM +-1% 1
R811	61G0805154	RST CHIPR 150KOHM +-5%
R929	61G0805240 1F	RST CHIPR 2.4KOHM +-1%
R817	61G0805330 2F	RST CHIPR 33KOHM +-1% 1
R926	61G0805330 2F	RST CHIPR 33KOHM +-1% 1
R841	61G0805360 0F	RST CHIPR 360 OHM +-1%
R827	61G0805360 1F	RST CHIPR 3.6KOHM +-1%

R834	61G0805360 1F	RST CHIPR 3.6KOHM +-1%
R924	61G0805360 1F	RST CHIPR 3.6KOHM +-1%
R826	61G0805361	RST CHIPR 360 OHM +-5%
R825	61G0805561	RST CHIPR 560 OHM +-5%
R835	61G0805561	RST CHIPR 560 OHM +-5%
R814	61G0805563	RST CHIPR 56KOHM +-5% 1
C835	61G1206000	RST CHIPR 0 OHM +-5% 1/
C836	61G1206000	RST CHIPR 0 OHM +-5% 1/
C837	61G1206000	RST CHIPR 0 OHM +-5% 1/
C838	61G1206000	RST CHIPR 0 OHM +-5% 1/
F902	61G1206000	RST CHIPR 0 OHM +-5% 1/
F903	61G1206000	RST CHIPR 0 OHM +-5% 1/
RJ801	61G1206000	RST CHIPR 0 OHM +-5% 1/
RJ901	61G1206000	RST CHIPR 0 OHM +-5% 1/
RJ902	61G1206000	RST CHIPR 0 OHM +-5% 1/
R912	61G1206100	RST CHIPR 10 OHM +-5% 1
R804	61G1206103	RST CHIPR 10KOHM +-5% 1
R905	61G1206103	RST CHIPR 10KOHM +-5% 1
R931	61G1206103	RST CHIPR 10KOHM +-5% 1
R818	61G1206150	RST CHIPR 15 OHM +-5% 1
R819	61G1206150	RST CHIPR 15 OHM +-5% 1
R828	61G1206150	RST CHIPR 15 OHM +-5% 1
R829	61G1206150	RST CHIPR 15 OHM +-5% 1
R807	61G1206220	RST CHIPR 22 OHM +-5% 1
R802	61G1206304	RST CHIPR 300KOHM +-5%
R900	61G1206334	RST CHIPR 330KOHM +-5%
R901	61G1206334	RST CHIPR 330KOHM +-5%
R902	61G1206334	RST CHIPR 330KOHM +-5%
R951	61G1206470	RST CHIPR 47 OHM +-5% 1
R952	61G1206470	RST CHIPR 47 OHM +-5% 1
R954	61G1206470	RST CHIPR 47 OHM +-5% 1
R955	61G1206470	RST CHIPR 47 OHM +-5% 1
R805	61G1206471	RST CHIPR 470 OHM +-5%
R808	61G1206474	RST CHIPR 470KOHM +-5%
R910	61G1206759	RST CHIPR 7.5 OHM +-5%
C833	65G0805101 31	CHIP 100PF 50V NPD 0805
C805	65G0805102 32	CHIP 1000P 50VX7R 0805
C803	65G0805103 32	CAP 0805 10NF +-10% 50V
C807	65G0805103 32	CAP 0805 10NF +-10% 50V
C912	65G0805104 32	CAP 0805 0.1U +-10% 50V
C916	65G0805104 32	CAP 0805 0.1U +-10% 50V
C928	65G0805104 32	CAP 0805 0.1U +-10% 50V
C929	65G0805104 32	CAP 0805 0.1U +-10% 50V
C930	65G0805104 32	CAP 0805 0.1U +-10% 50V
C931	65G0805104 32	CAP 0805 0.1U +-10% 50V
C806	65G0805105 22	CAP 0805 1UF +-10% 25V
C812	65G0805152 32	CAP 0805 1500PFK 50V X7
C813	65G0805152 32	CAP 0805 1500PFK 50V X7
C822	65G0805152 32	CAP 0805 1500PFK 50V X7
C823	65G0805152 32	CAP 0805 1500PFK 50V X7
C913	65G0805221 32	CAP 0805 220PFK 50V X7R
C819	65G0805223 22	CHIP 0.022UF 25V X7R 08
C804	65G0805225 12	CHIP 2.2UF 15V X7R 0805
C818	65G0805271 31	MLCC 0805 270PF J 50V N
C827	65G0805271 31	MLCC 0805 270PF J 50V N
C831	65G0805271 31	MLCC 0805 270PF J 50V N

C830	65G0805470 31	47PF/50V/0805/NPO
C832	65G0805470 31	47PF/50V/0805/NPO
C914	65G0805471 22	470PF 25V
C809	65G0805473 32	CAP 0805 0.047UFK 50V X
C810	65G080556131G	560PF NPO 2%
C808	65G0805682 32	CHIP 6.8nF 50V X7R 0805
D801	93G 64 42 PP	BAV70 SOT-23
D803	93G 64 42 PP	BAV70 SOT-23
D802	93G 6433P	BAV99
D804	93G 6433P	BAV99
ZD922	93G 39GA26 T	ZENER DIODE RLZ5.1B SEM
ZD801	93G 39S 24 T	RLZ 5.6B LLDS
ZD920	93G 39S 38 T	PTZ 9.1B
ZD921	93G 39S 40 T	RLZ 13B LLDS
D910	93G 64S511SEM	DIODE BD 1N4148W SEMTEC
D915	93G 64S511SEM	DIODE BD 1N4148W SEMTEC
D916	93G 64S511SEM	DIODE BD 1N4148W SEMTEC
CN901	6G 31500	EYELET
L901	6G 31502	1.5MM RIVET
L902	6G 31502	1.5MM RIVET
NR901	6G 31502	1.5MM RIVET
PT801	6G 31502	1.5MM RIVET
PT802	6G 31502	1.5MM RIVET
Q900	6G 31502	1.5MM RIVET
R916	6G 31502	1.5MM RIVET
T901	6G 31502	1.5MM RIVET
	715G1823 3	POWER BOARD PCB
J811	95G 90 23	TINCOATEDCOPPER
J812	95G 90 23	TINCOATEDCOPPER
J814	95G 90 23	TINCOATEDCOPPER
J815	95G 90 23	TINCOATEDCOPPER
J816	95G 90 23	TINCOATEDCOPPER
J817	95G 90 23	TINCOATEDCOPPER
J818	95G 90 23	TINCOATEDCOPPER
J820	95G 90 23	TINCOATEDCOPPER
J821	95G 90 23	TINCOATEDCOPPER
J822	95G 90 23	TINCOATEDCOPPER
J823	95G 90 23	TINCOATEDCOPPER
J824	95G 90 23	TINCOATEDCOPPER
J825	95G 90 23	TINCOATEDCOPPER
J901	95G 90 23	TINCOATEDCOPPER
J902	95G 90 23	TINCOATEDCOPPER
J903	95G 90 23	TINCOATEDCOPPER
J904	95G 90 23	TINCOATEDCOPPER
J905	95G 90 23	TINCOATEDCOPPER
J906	95G 90 23	TINCOATEDCOPPER
J907	95G 90 23	TINCOATEDCOPPER
J908	95G 90 23	TINCOATEDCOPPER
J909	95G 90 23	TINCOATEDCOPPER
J910	95G 90 23	TINCOATEDCOPPER
R922	61G172S47152T	RST CFR 470 OHM +-5% 1/
R822	61G212Y305 KT	RST MGFR 3MOHM +-5% 1/2
R832	61G212Y305 KT	RST MGFR 3MOHM +-5% 1/2
D901	93G 6038T52T	FR103
IC921	56G 158 10 T	AZ431AZ-AE1 TO-92
C910	65G 1K152 1T6921	1.5nF/1K Y5P +-10%

C920	65G517K102 5T	1000PF 10% Y5P 500V
C921	65G517K102 5T	1000PF 10% Y5P 500V
C911	67G 2152207RT	ELCAP 22UF +-20% 50V 10
	34FPE19P03	CASE EEL19
	34FPE19P03	CASE EEL19
R909	61G152M10458F6W56	RST MOFR 100KOHM +-5% 2
	96G 29 6	SHRINK TUBE UL/CSA
HS3 D92	90G6264 1	HEAT SINK
D920	93G 60276	DIODE SBT150-10LST SANY
	M1G1730 8120	SCREW
Q900	57G 600 35	STP8NK80ZFP TO-220FP
HS4 Q90	90G6264 1	HEAT SINK
	M1G1730 8120	SCREW
	Q1G 130 6120	SCREW (T3X6)
	AQ1G1740 12120	SCREW
	H37G0002 2	HINGE
	Q15G8356 1	BASE BKT
	Q34G1842 GM 2B	STAND TOP
	Q34G1843 GM 1B 20	STAND BUTTOM
	Q34G1845 GM 1L 33	BASE